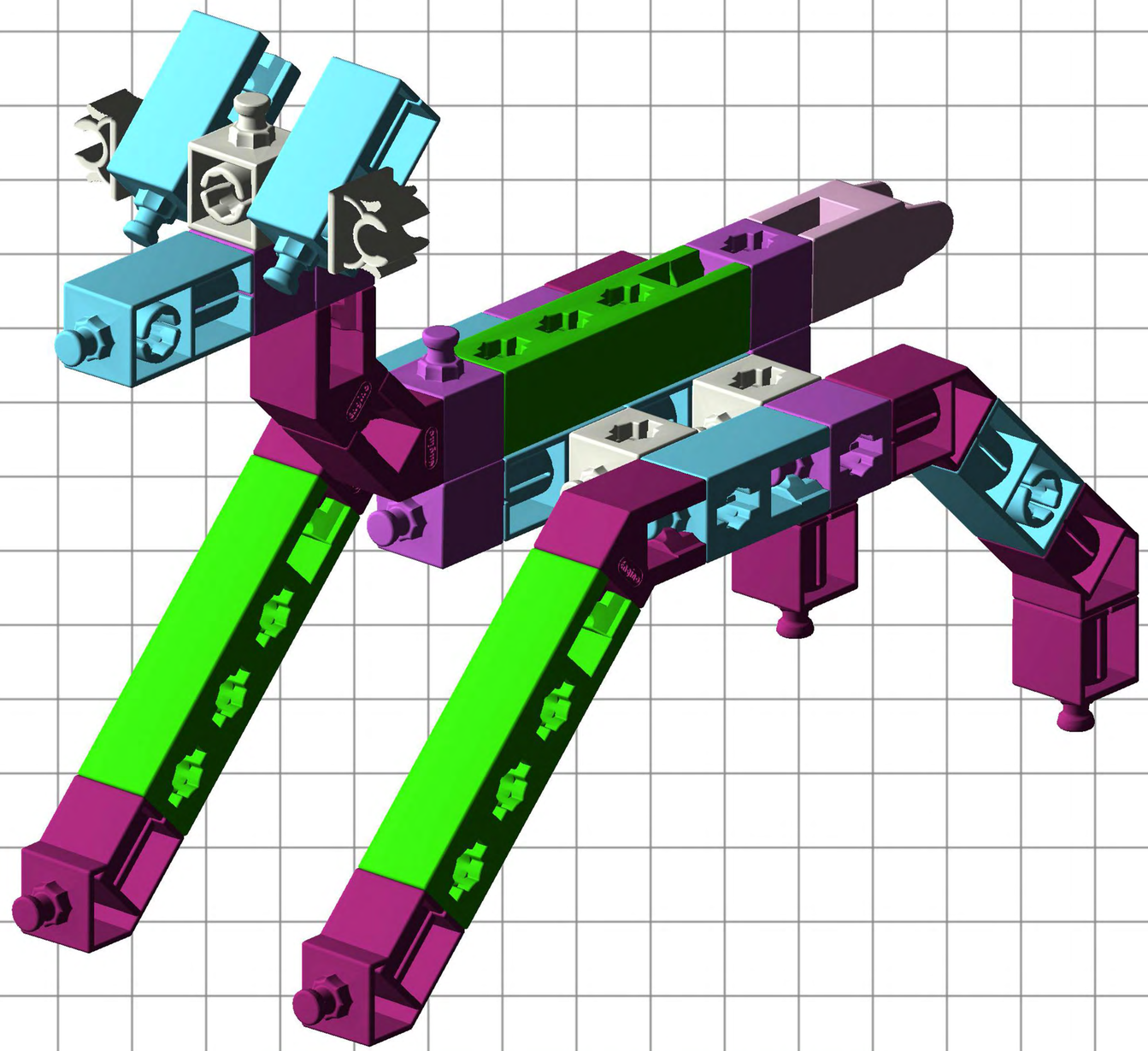

Dog

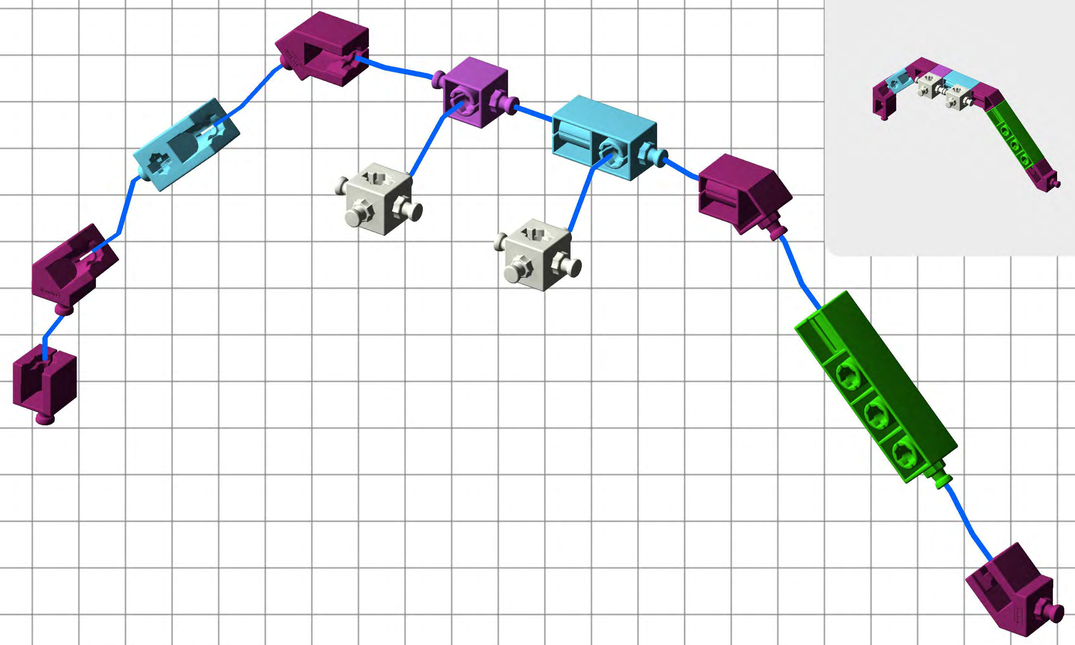

01

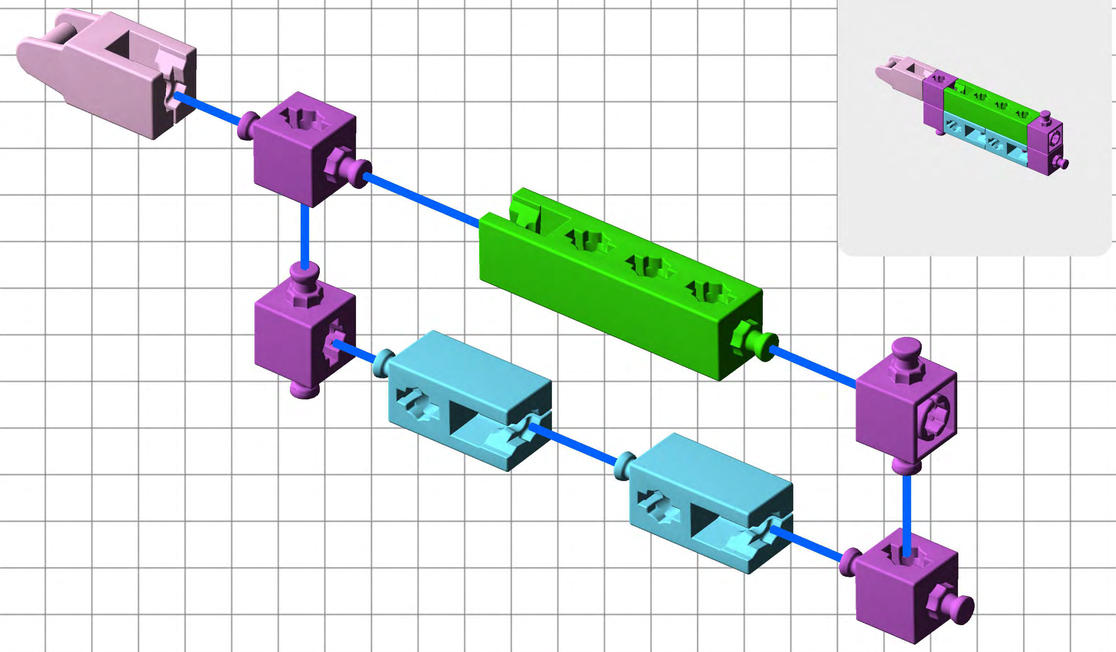

02

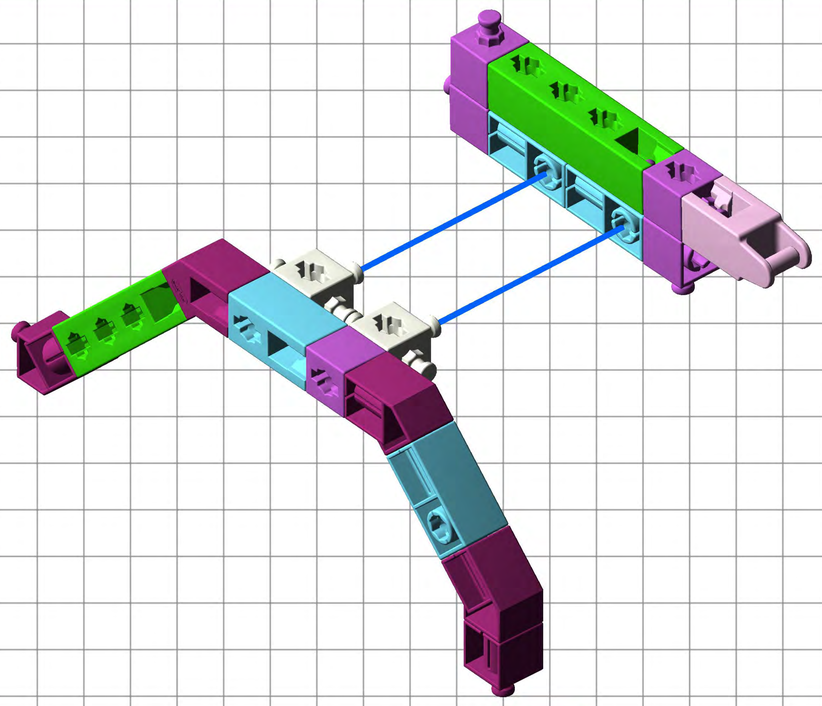

03

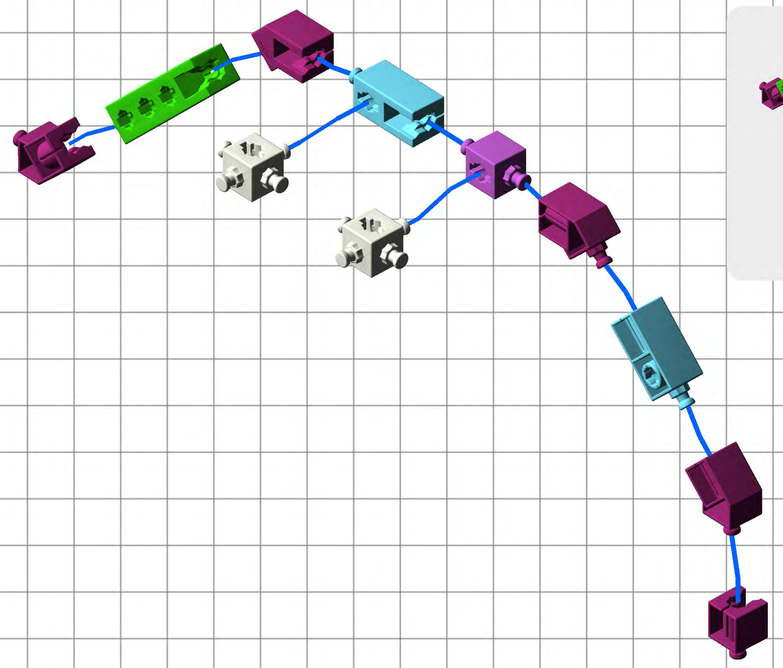

04

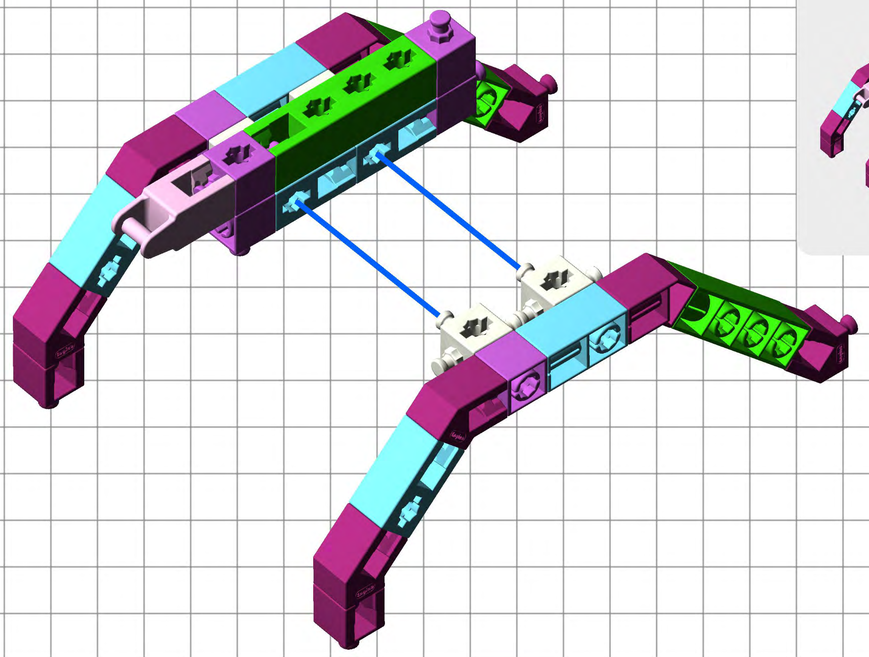

05

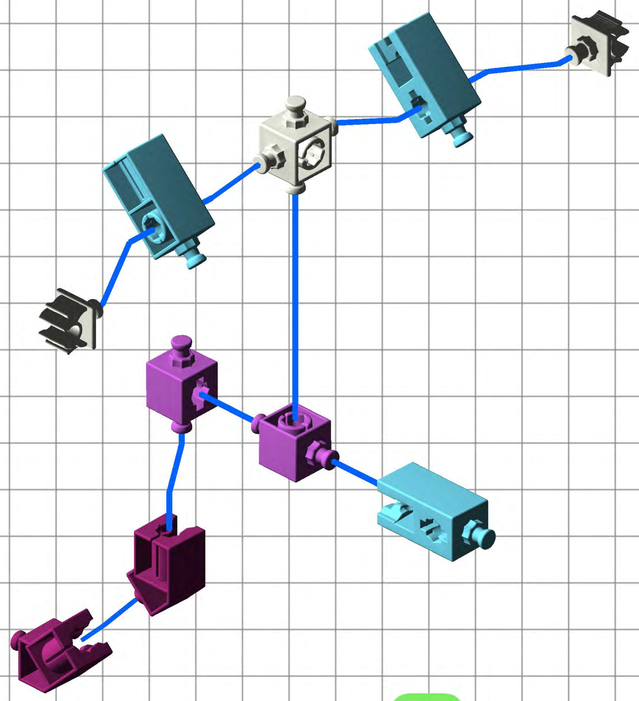

06

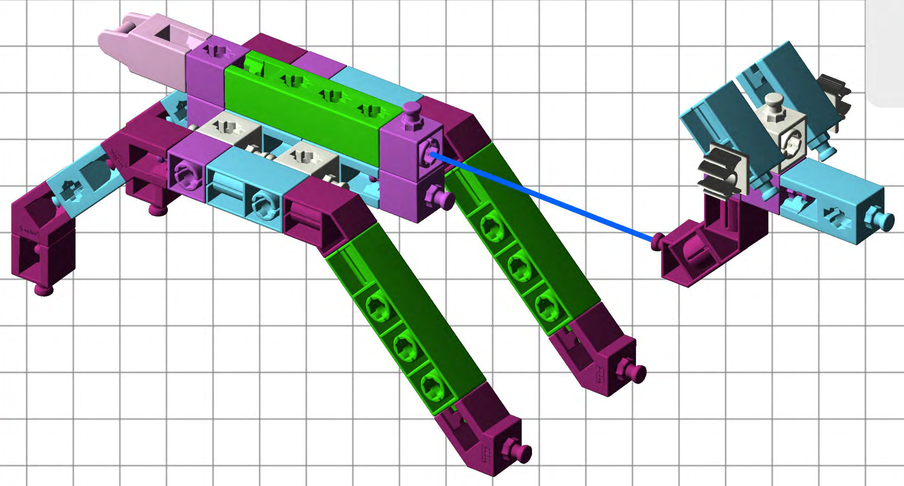

07

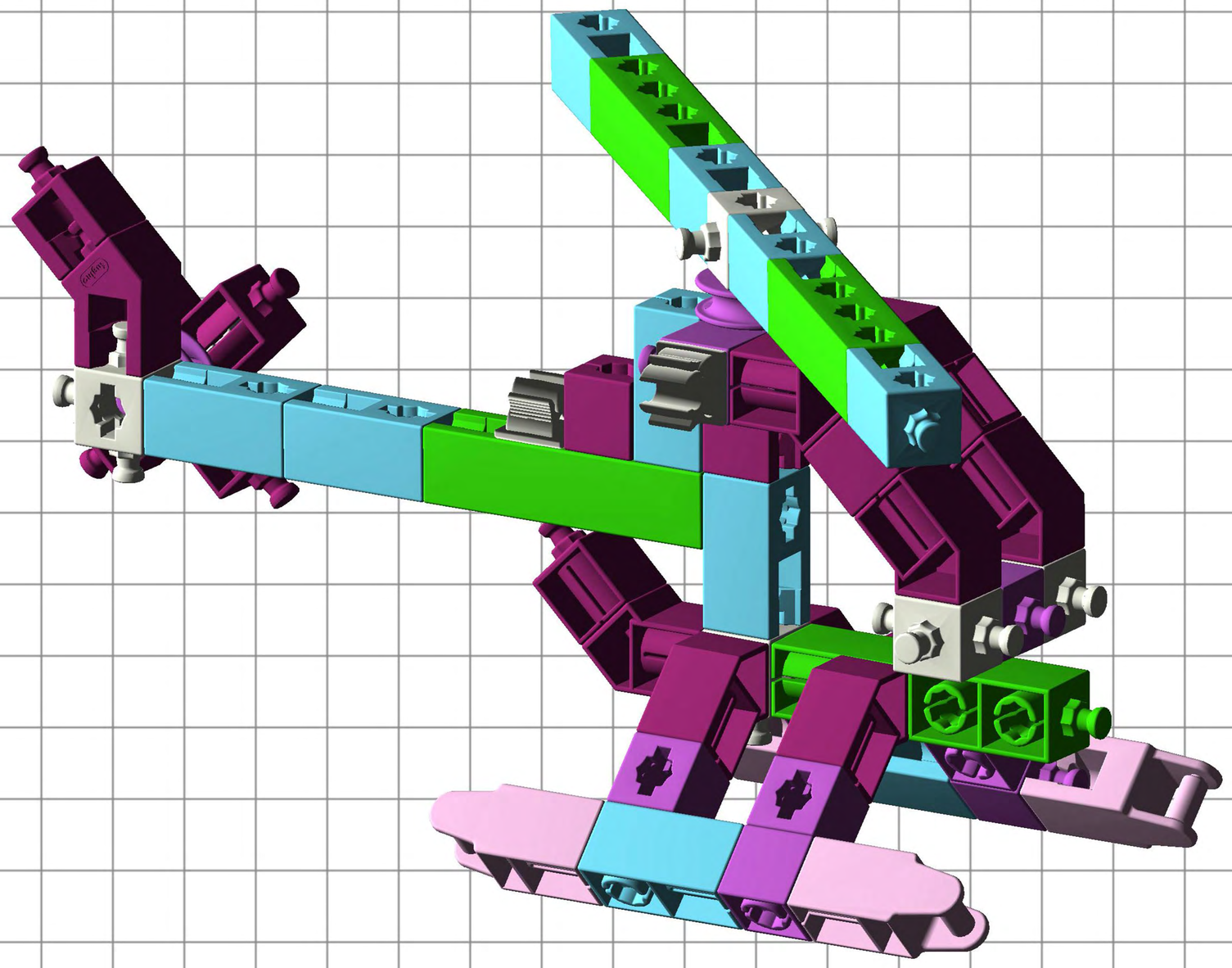

Helicopter

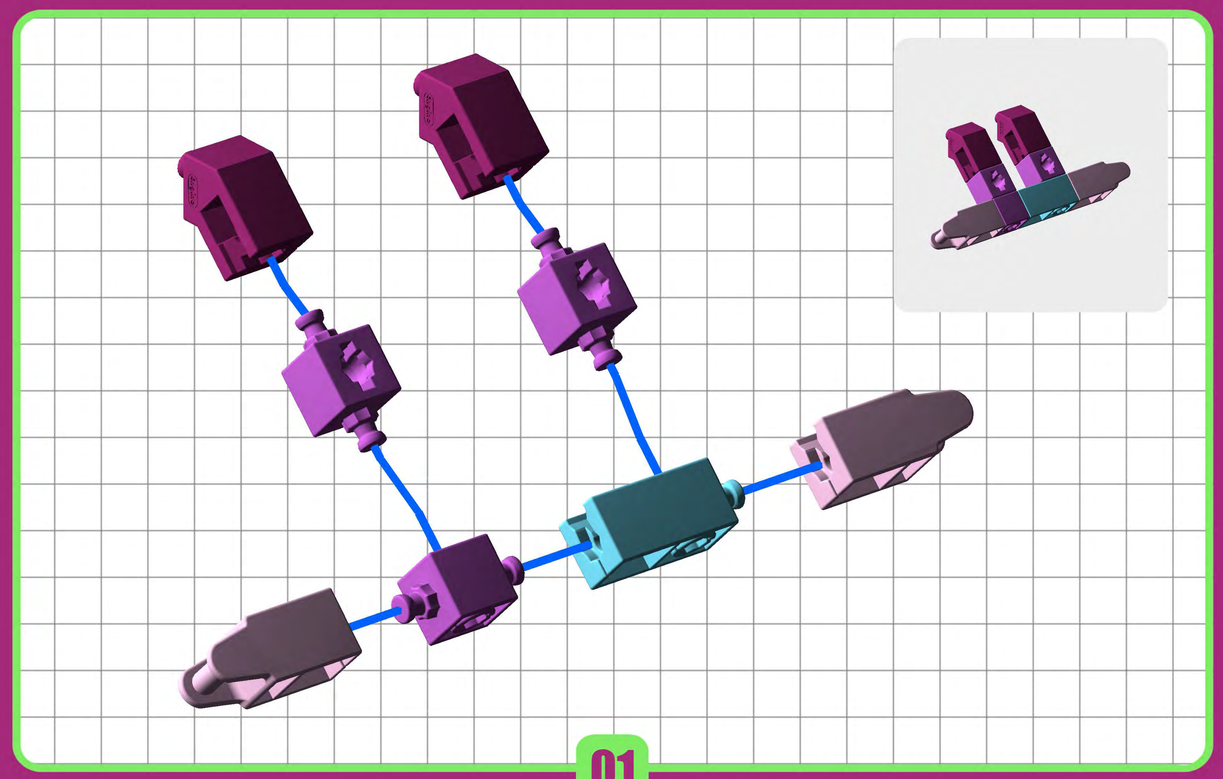

01

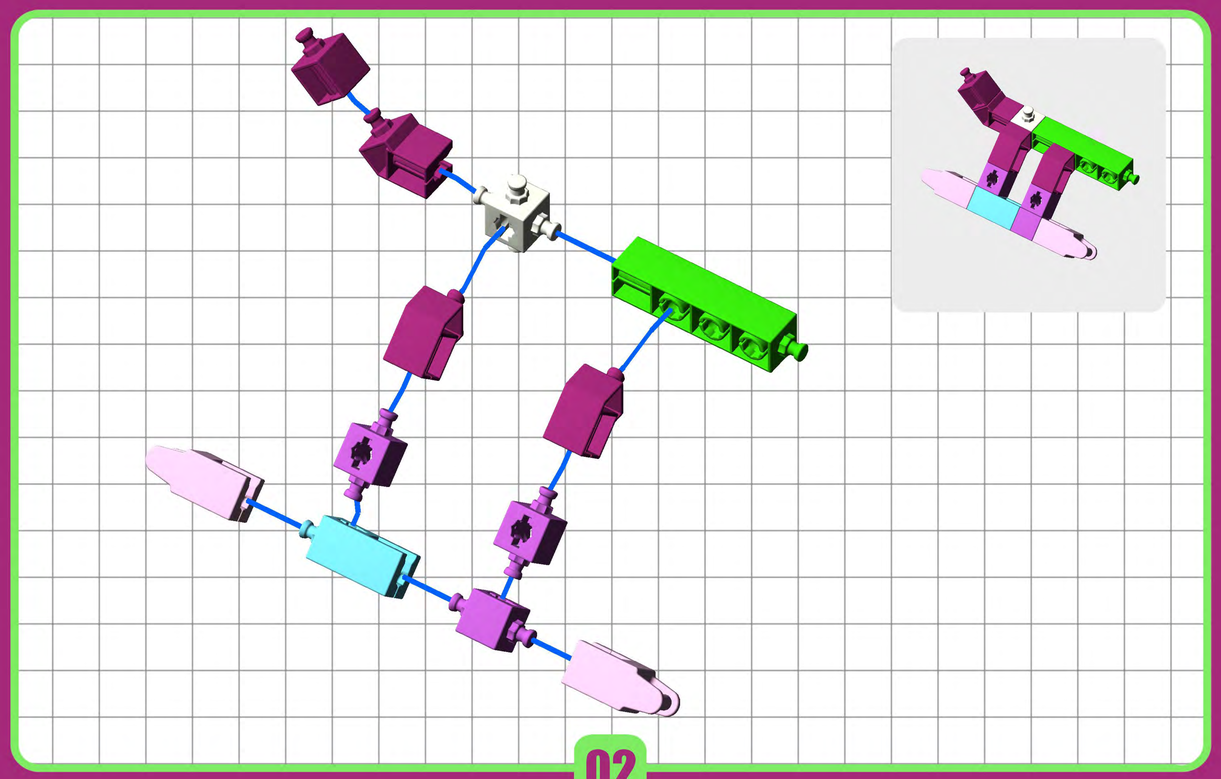

02

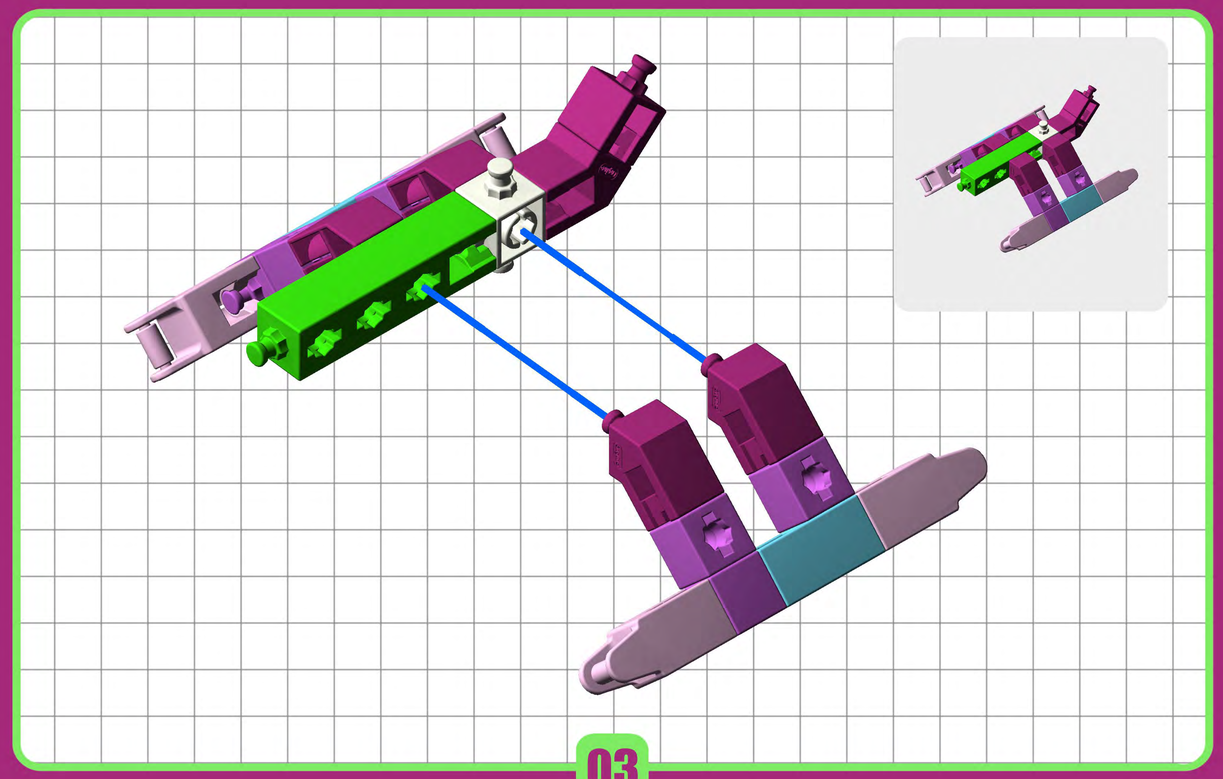

03

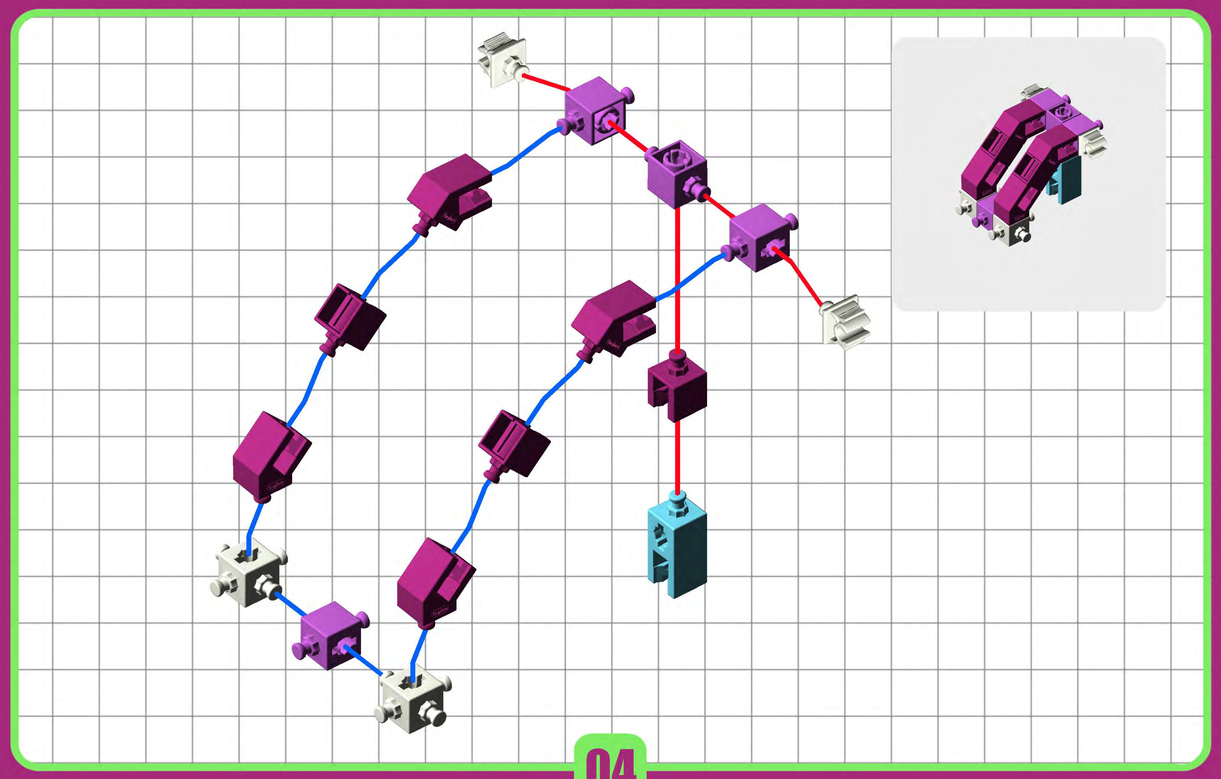

04

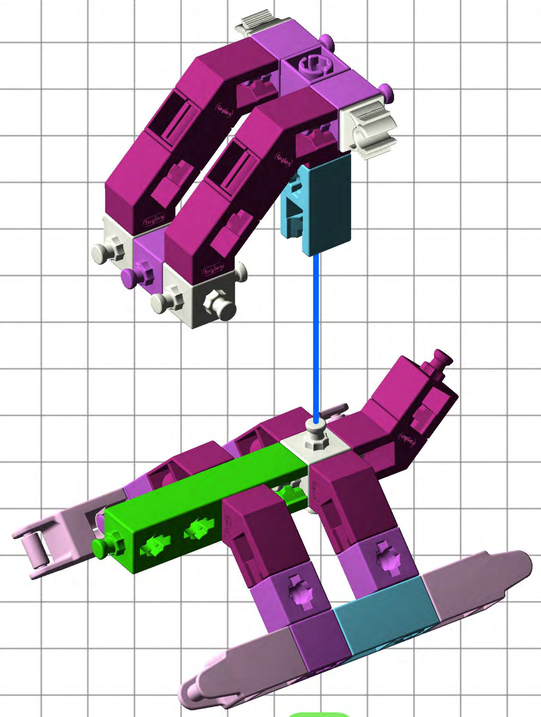

05

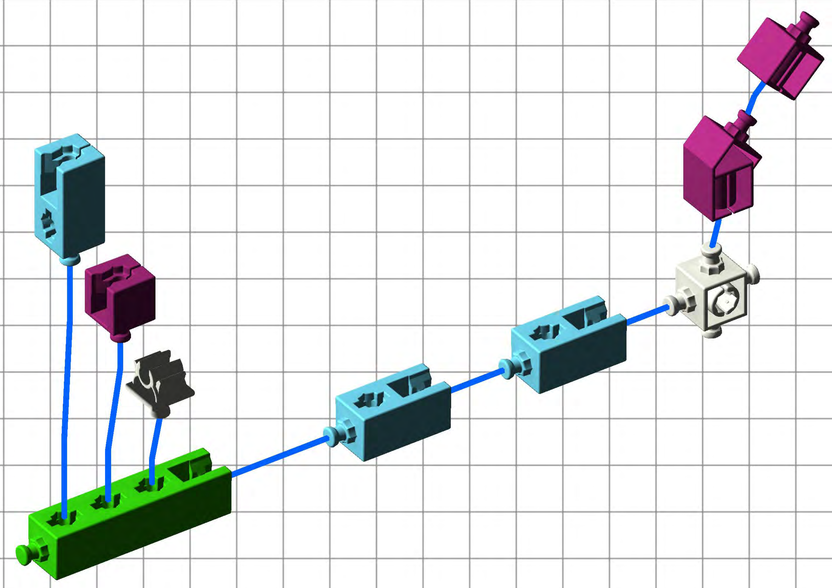

06

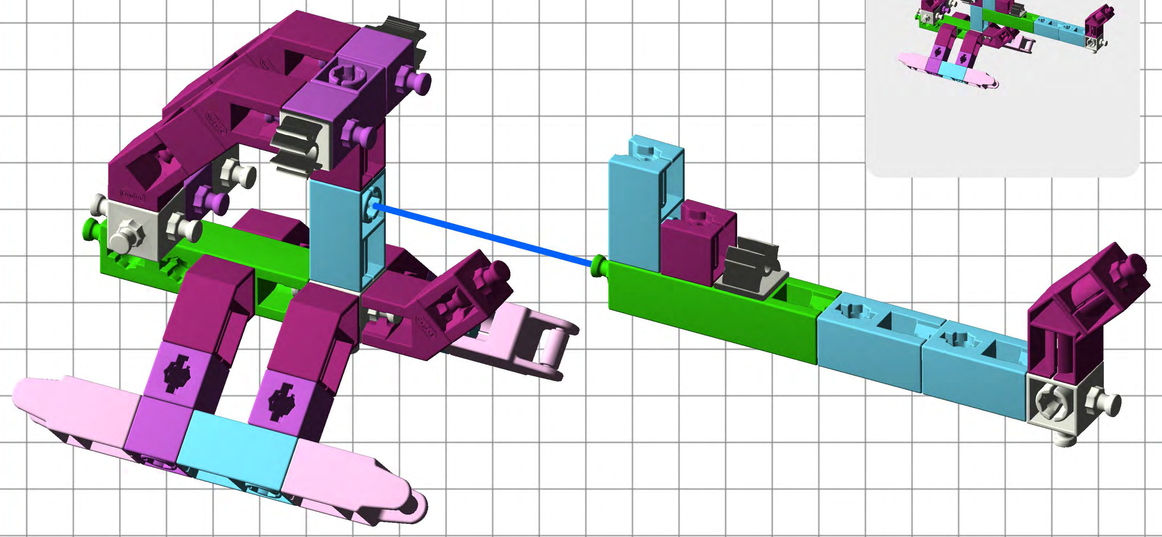

07

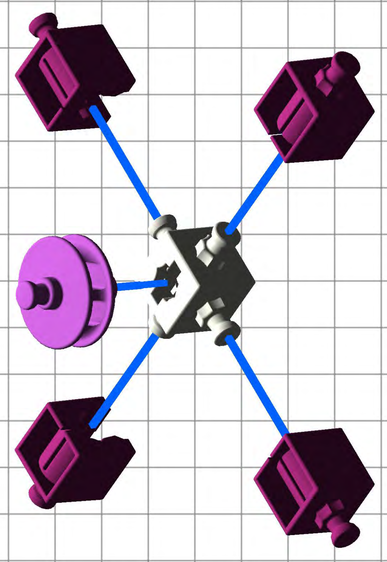

08

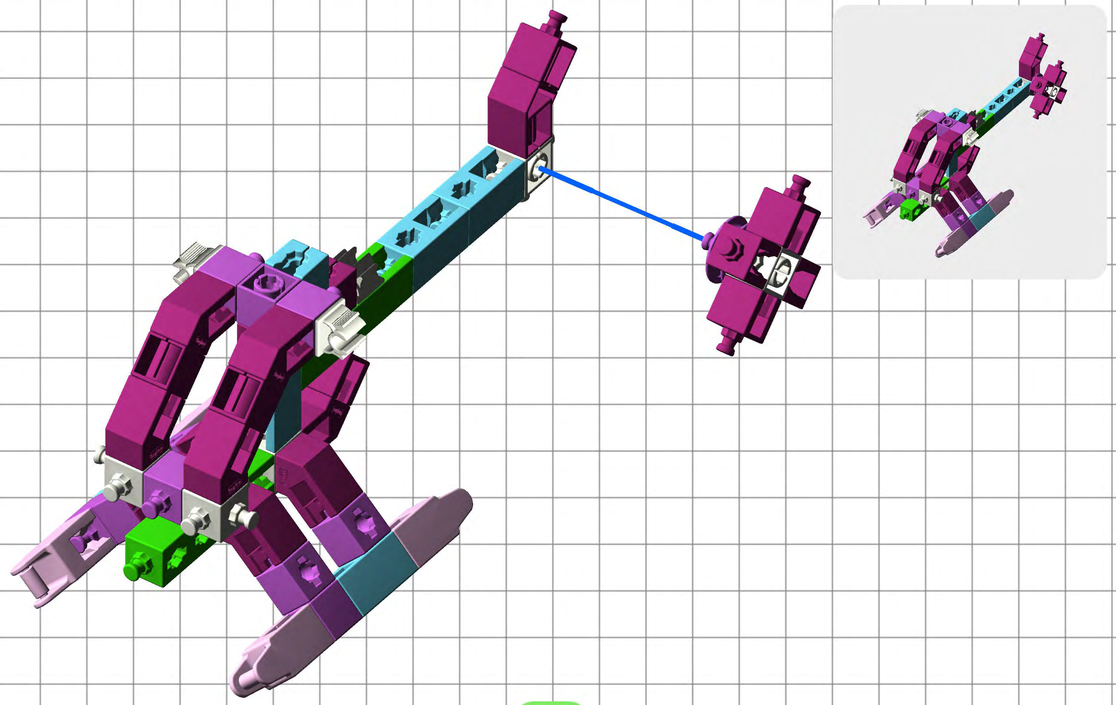

09

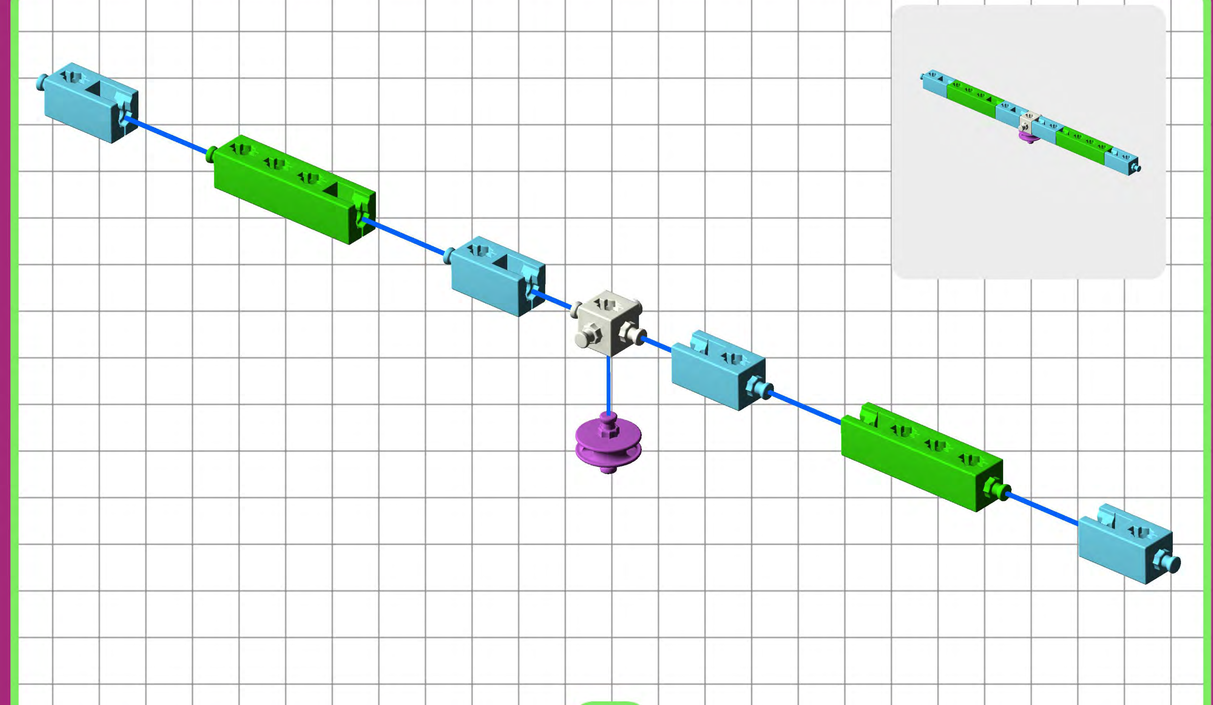

10

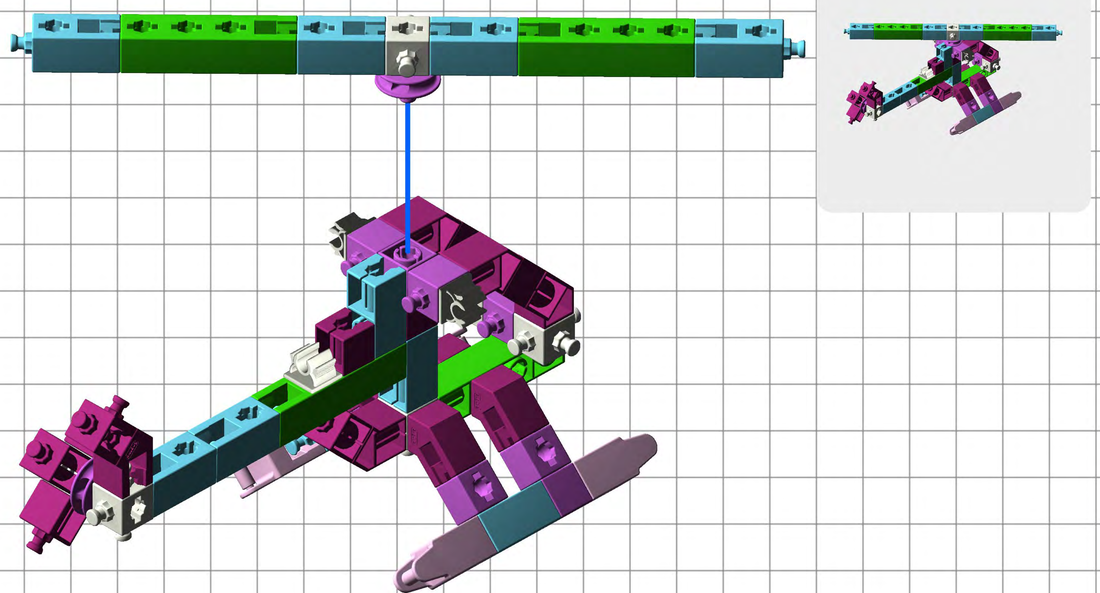

11

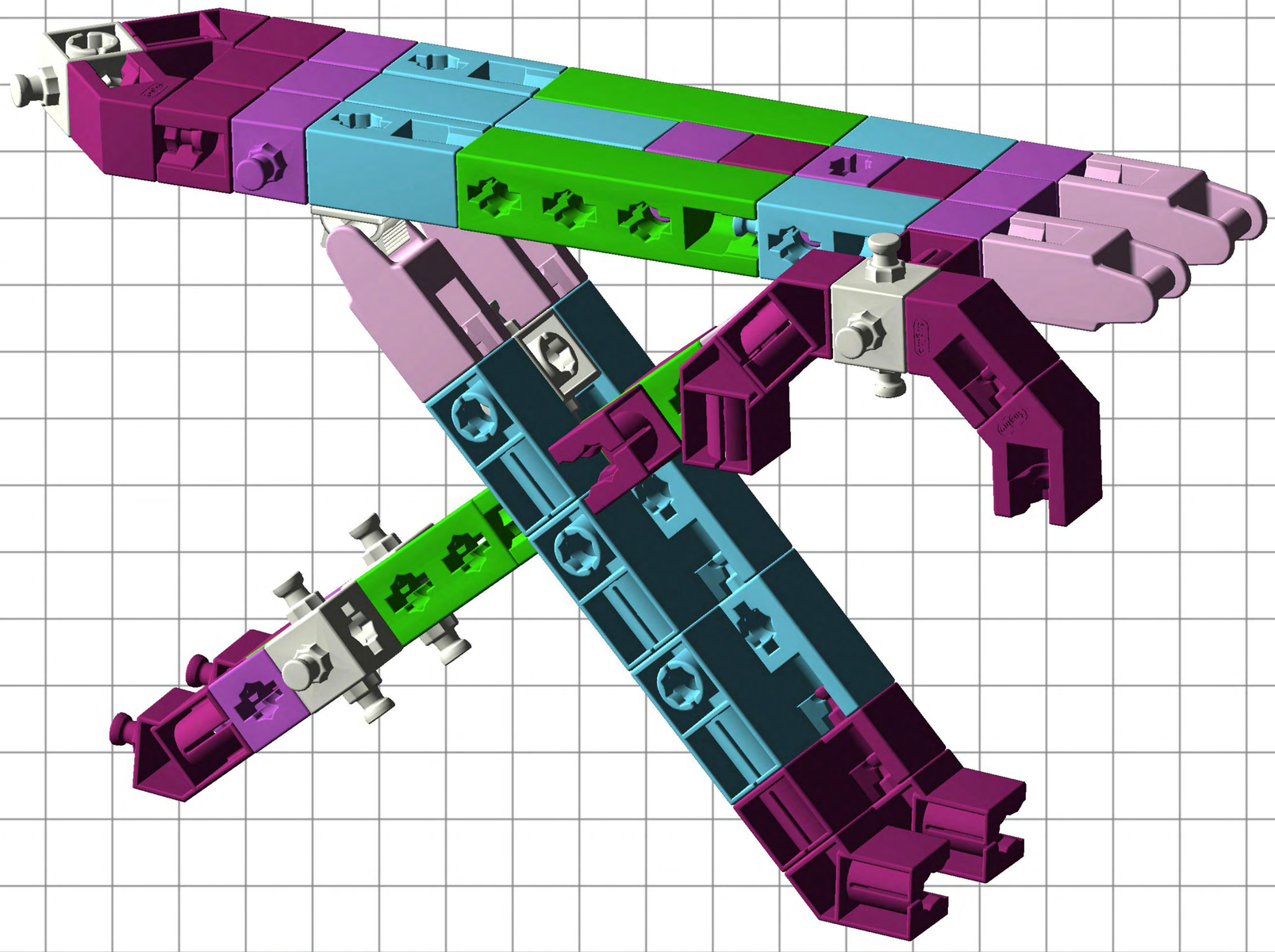

Ironing Board

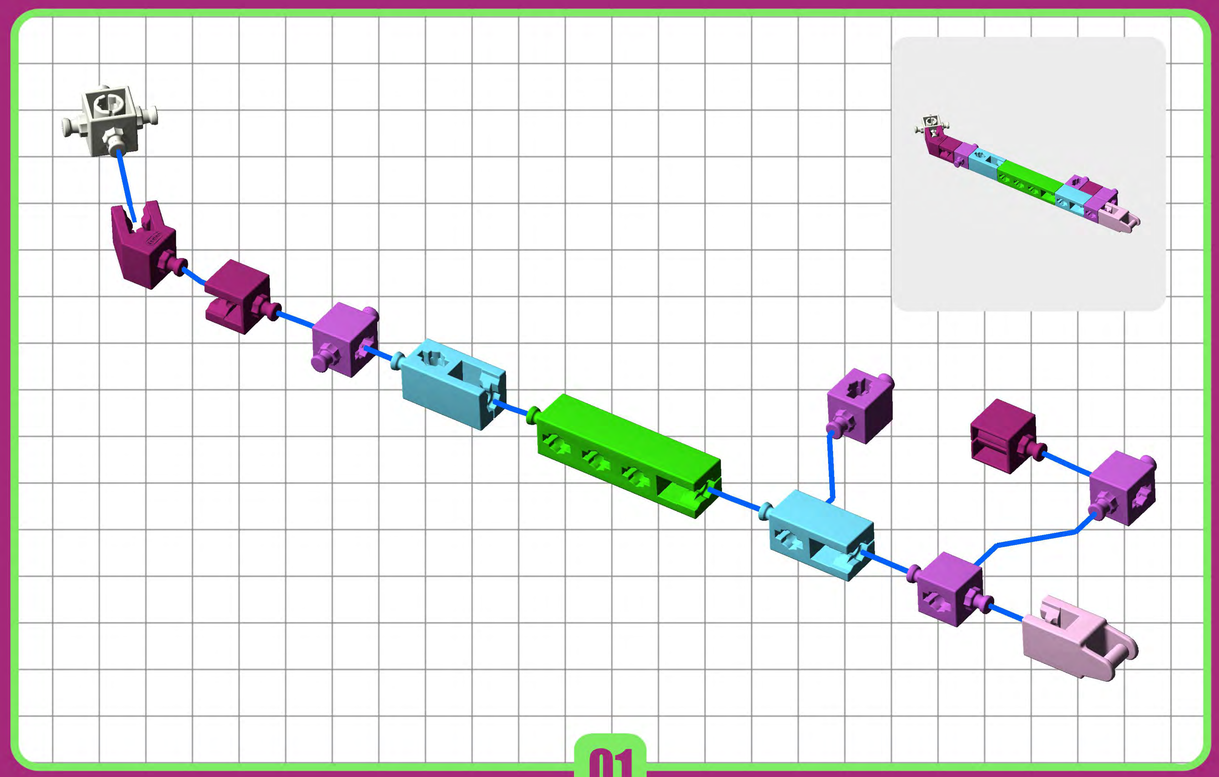

01

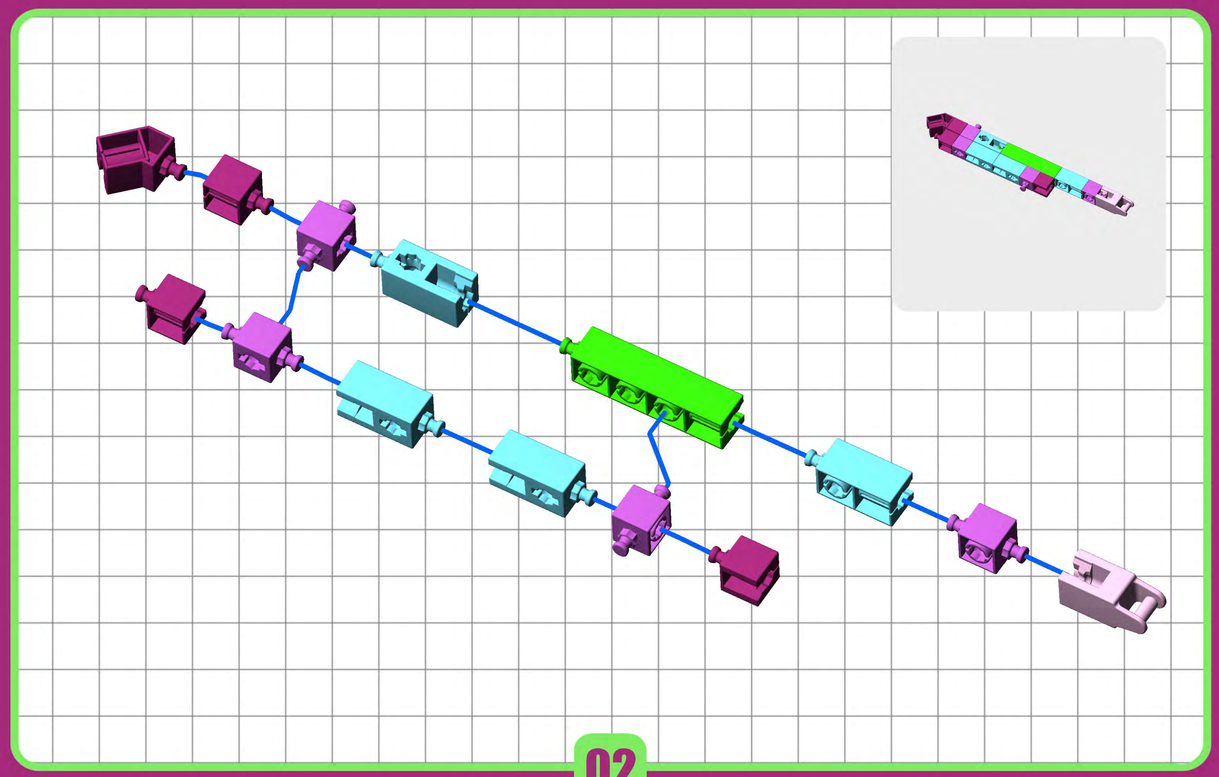

02

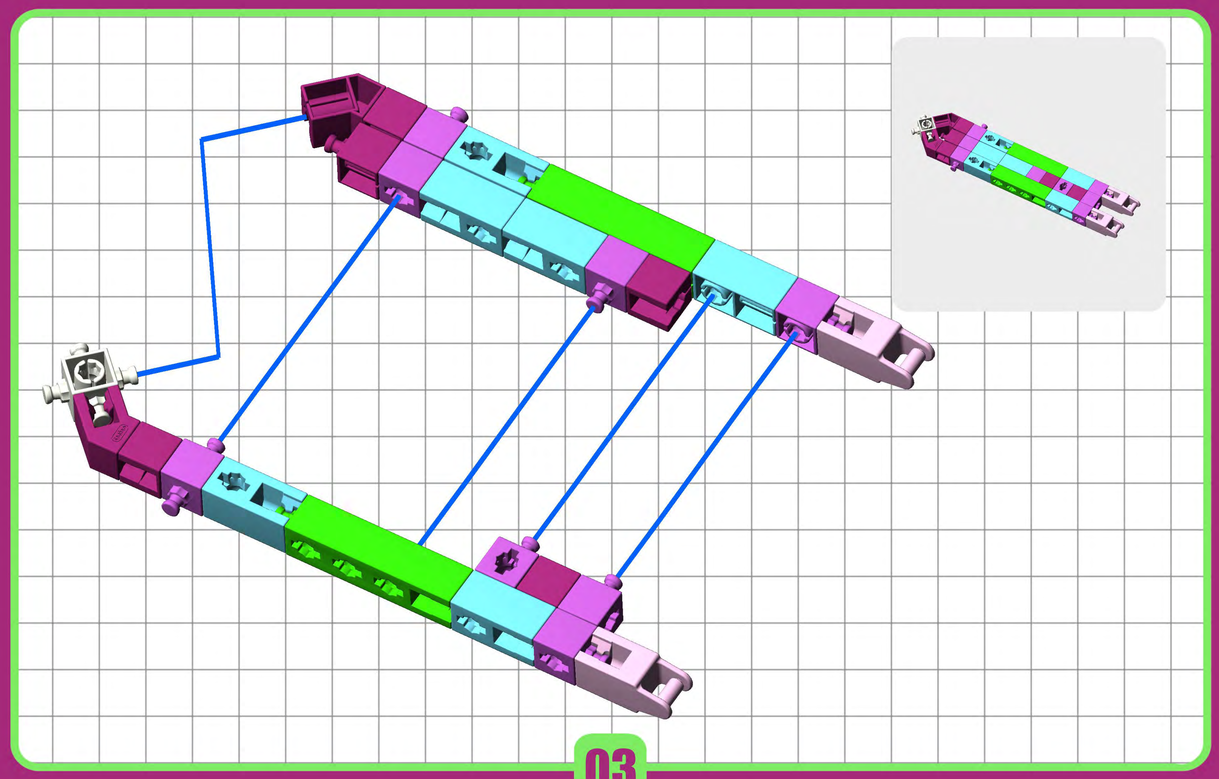

03

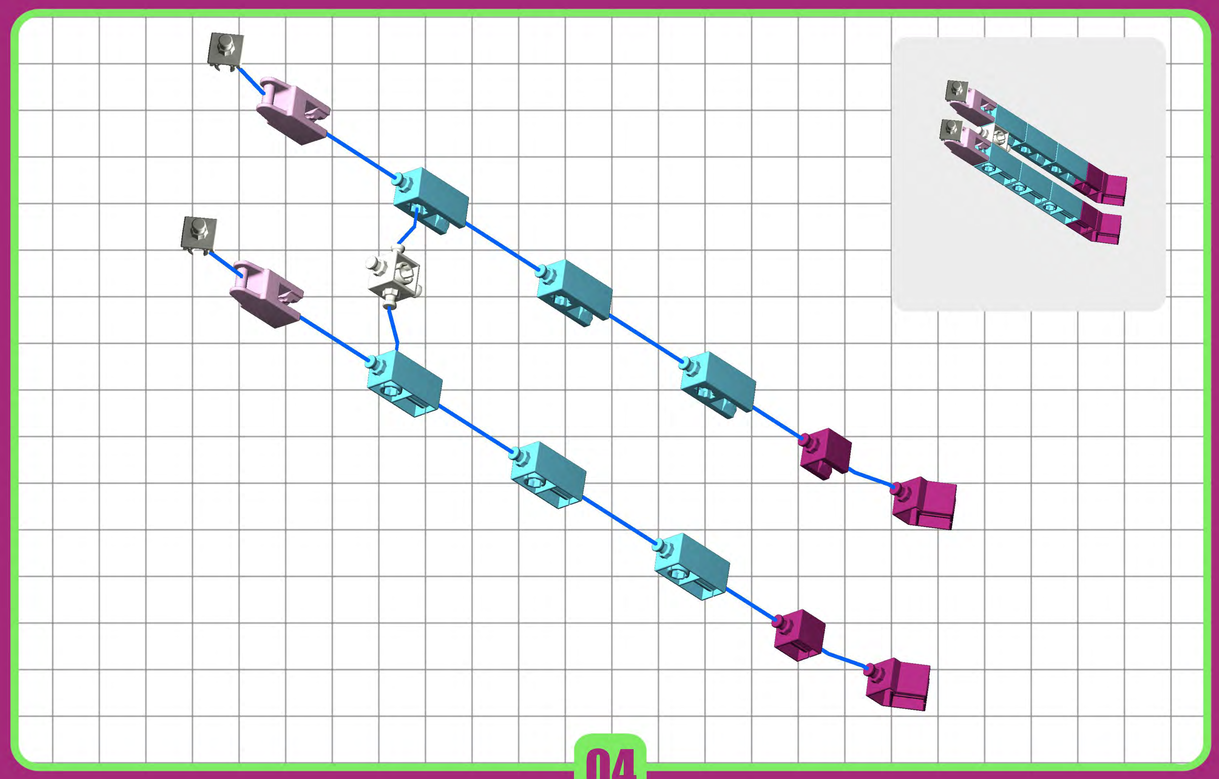

04

05

06

07

08

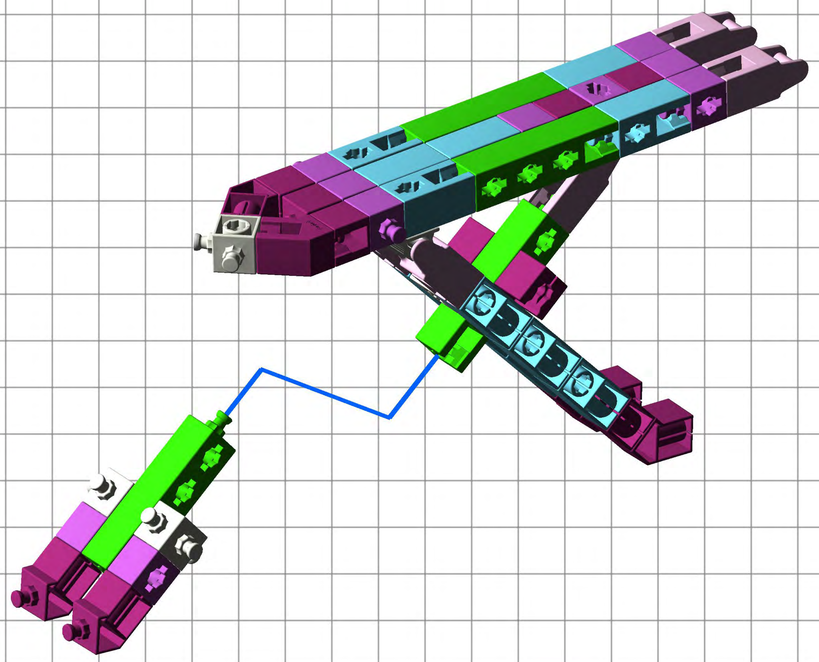

09

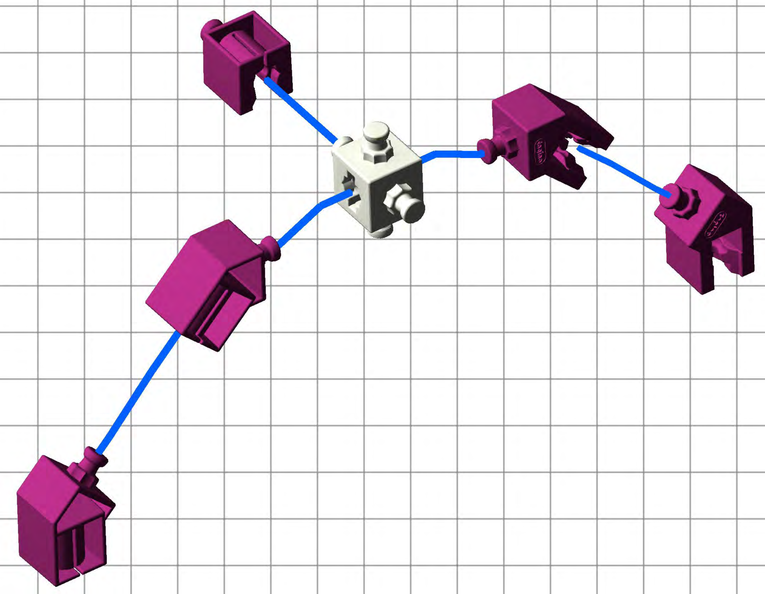

10

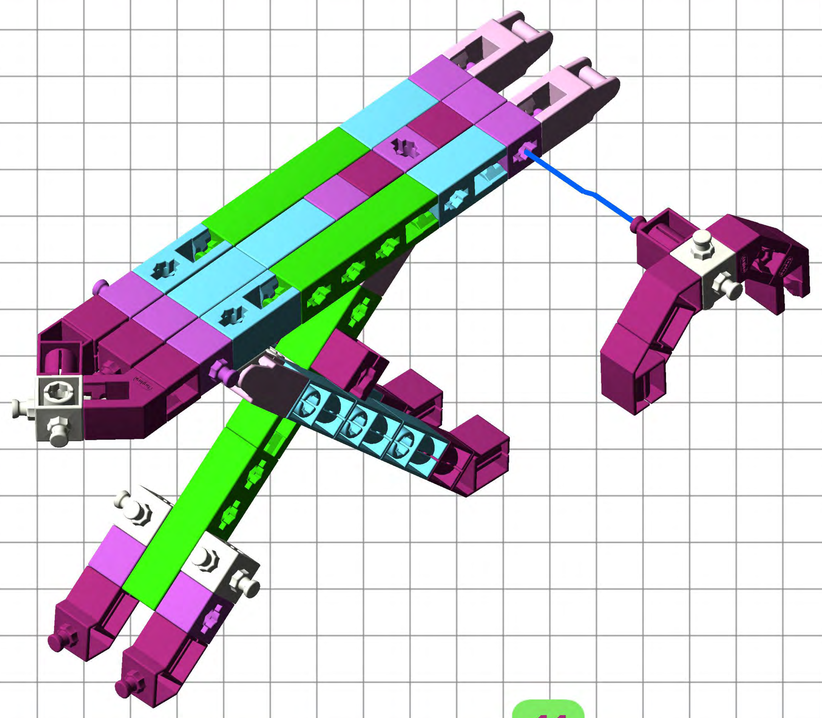

11

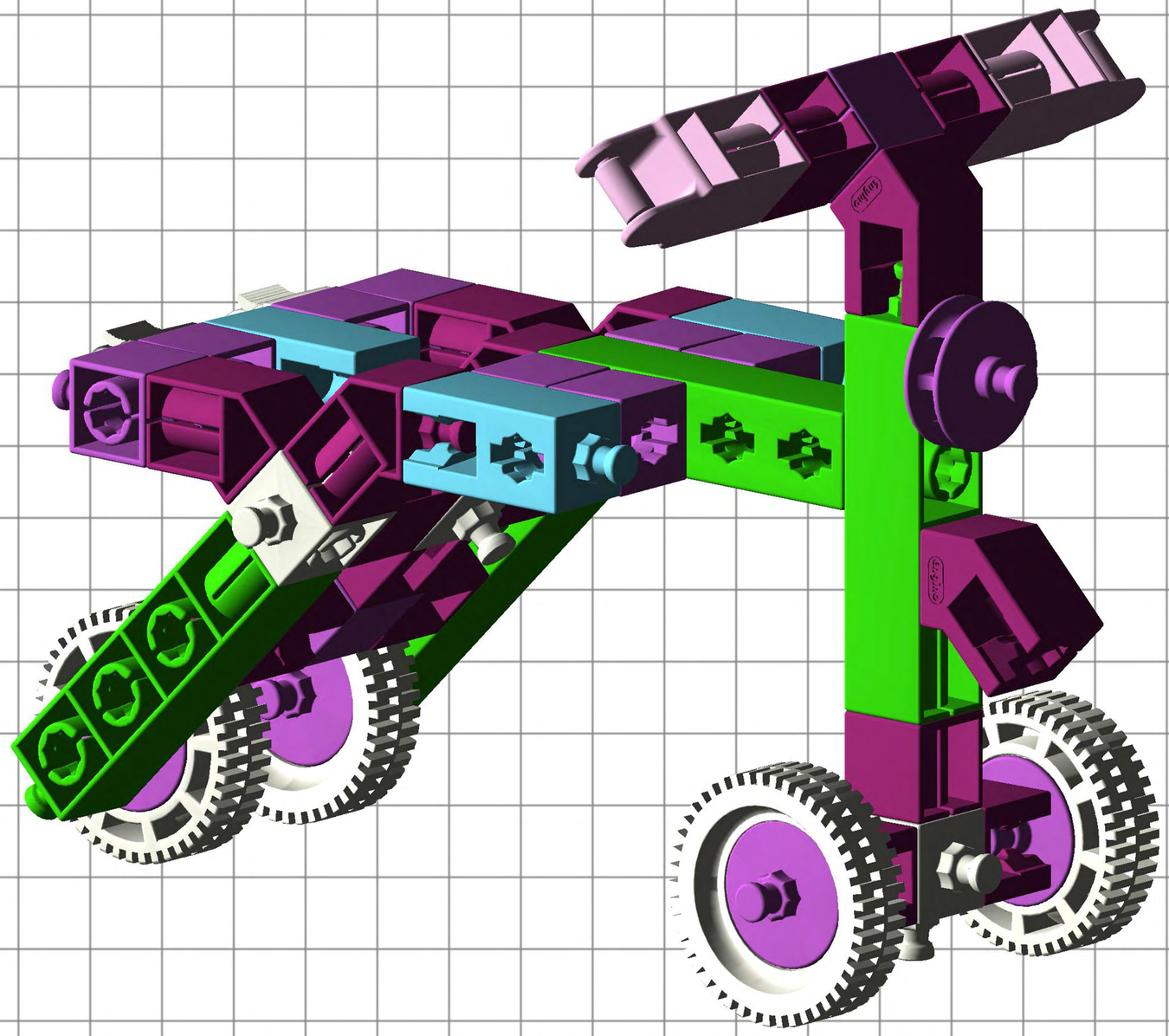

Push Bike

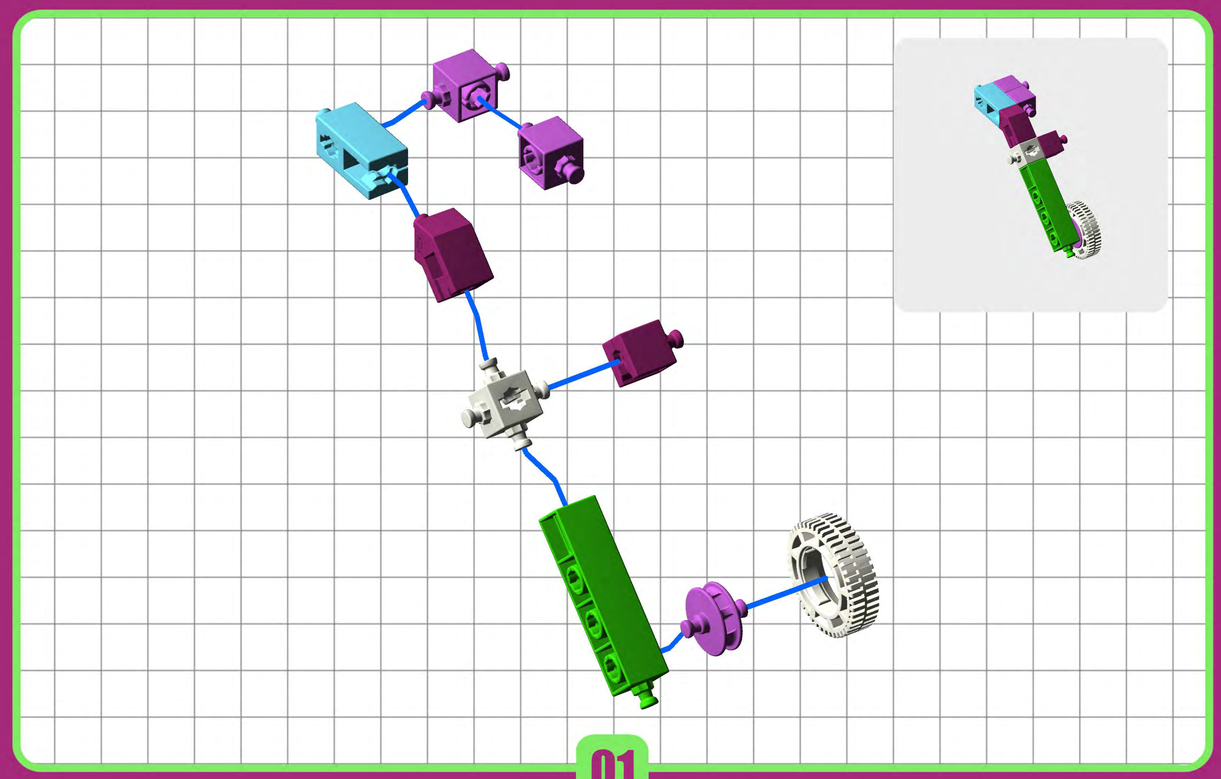

01

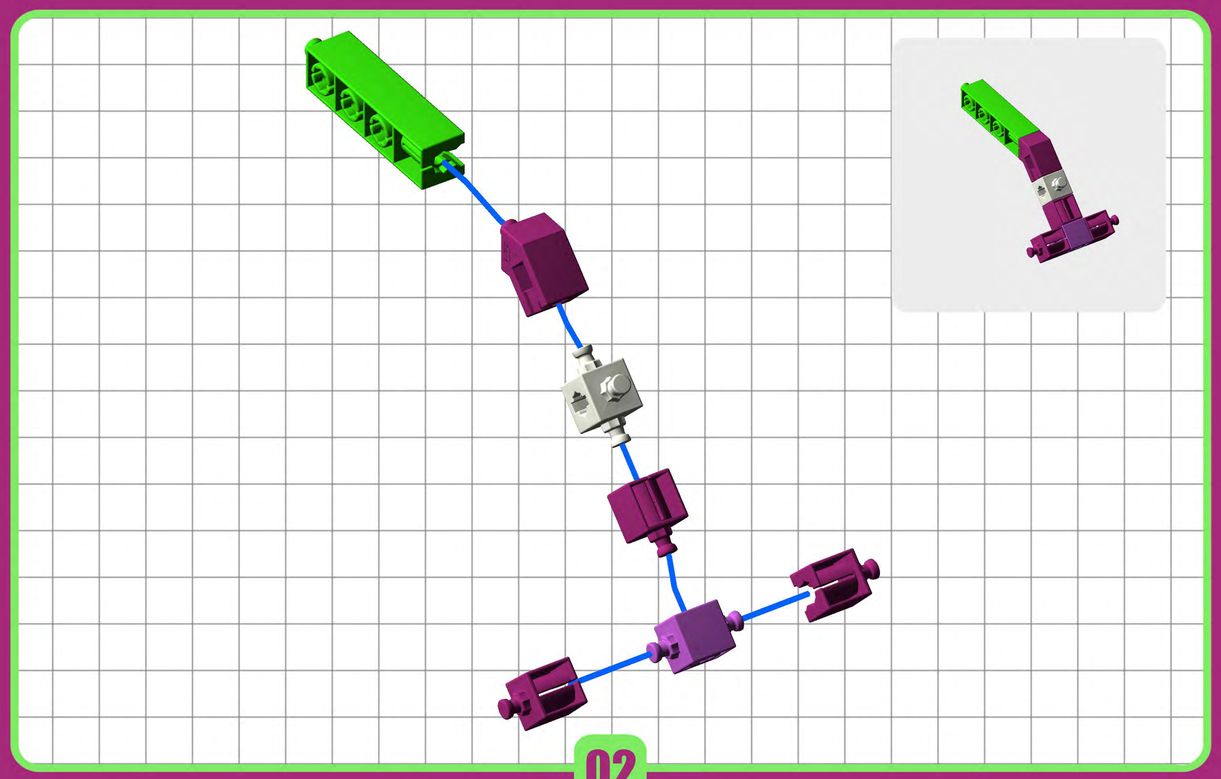

02

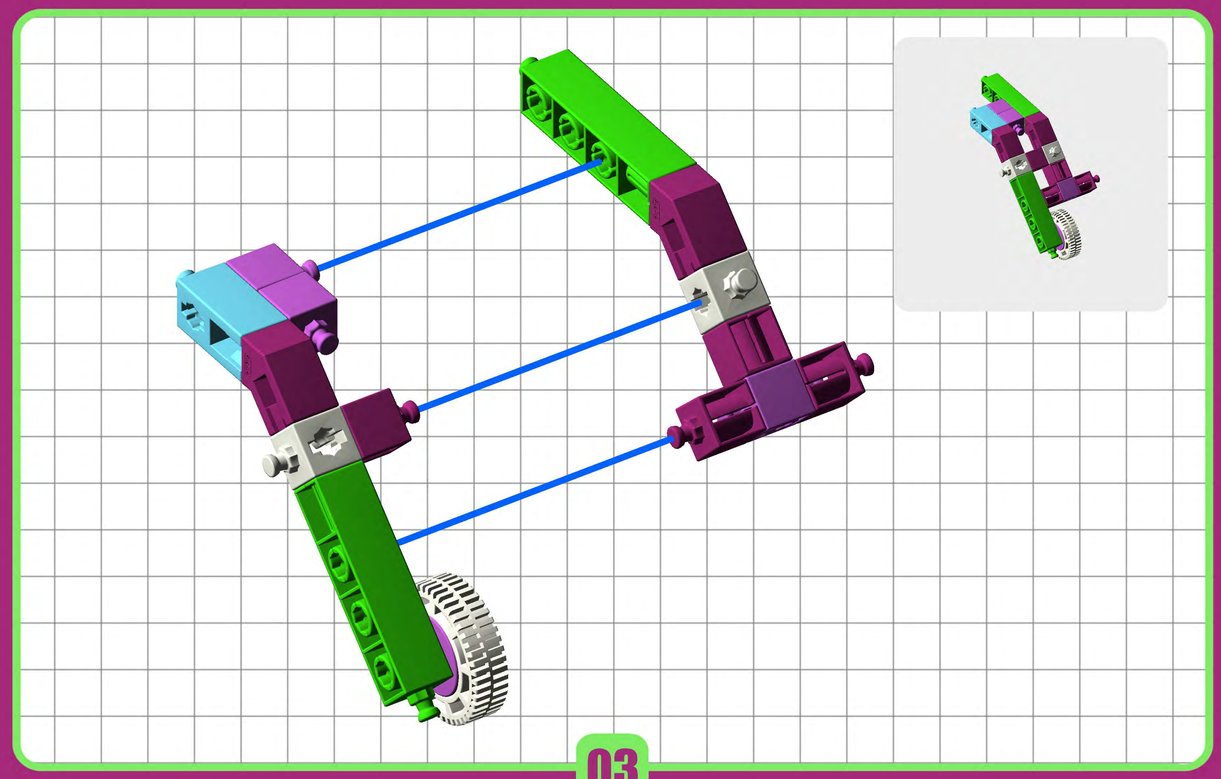

03

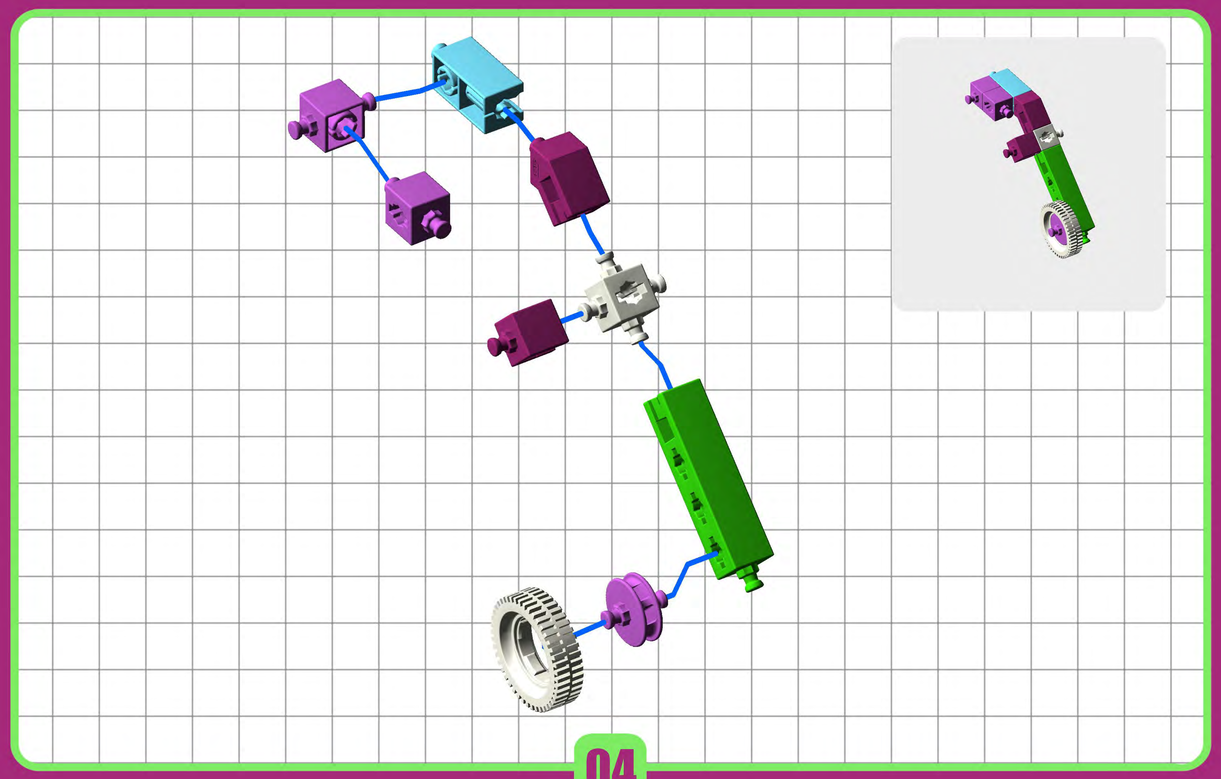

04

05

06

07

08

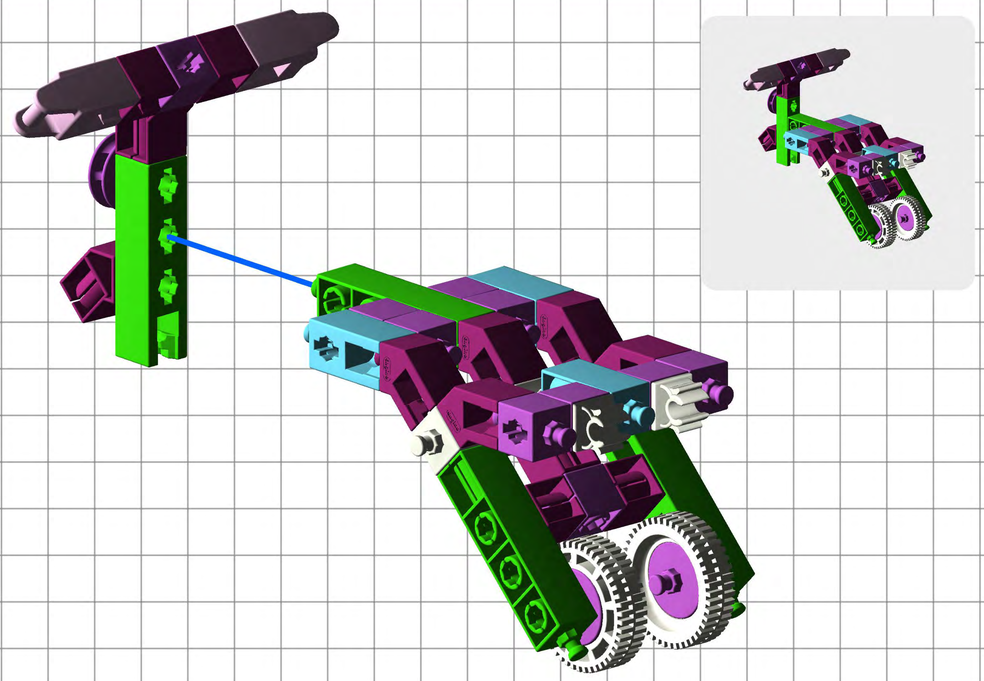

09

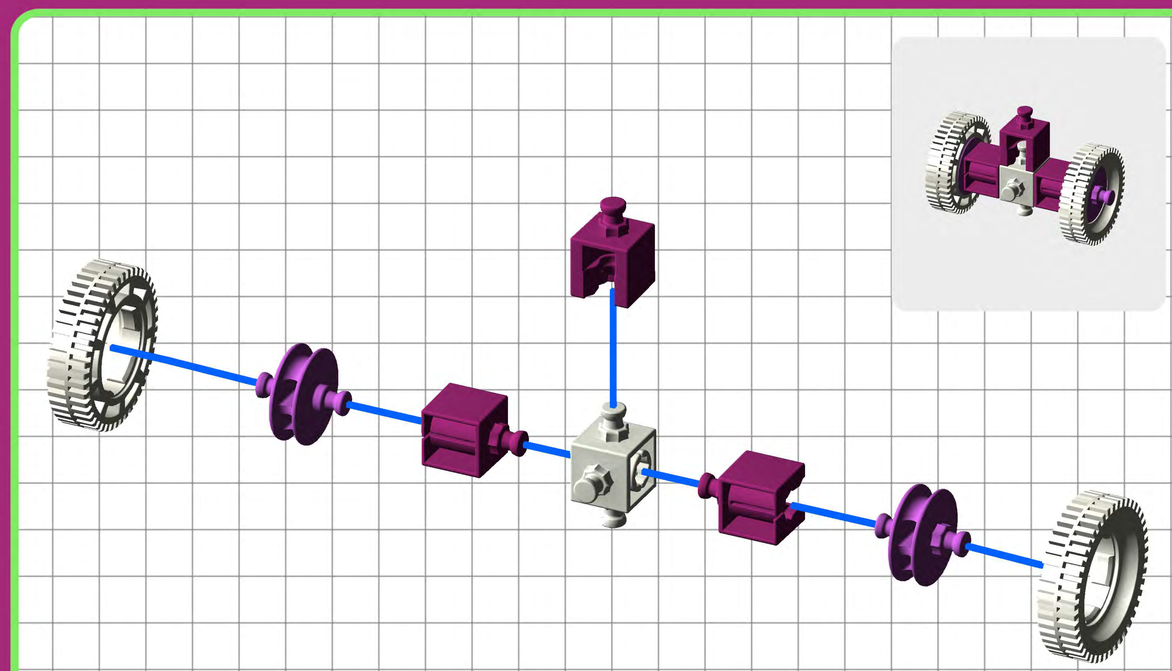

10

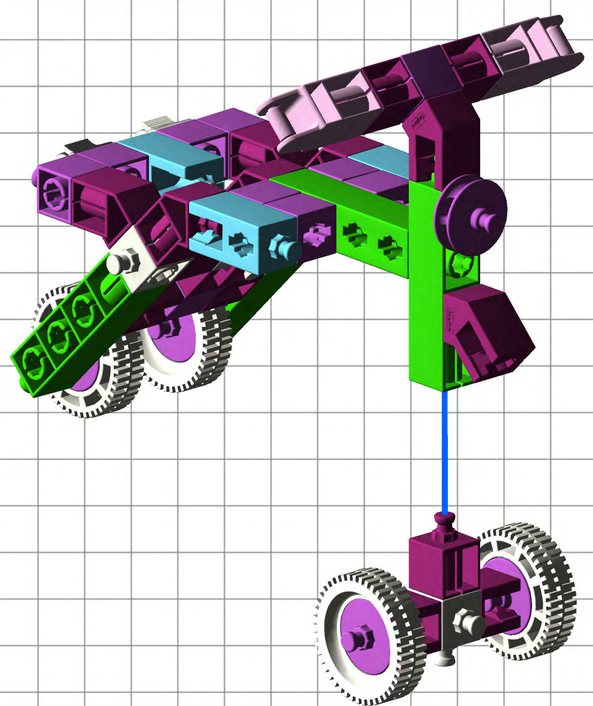

11

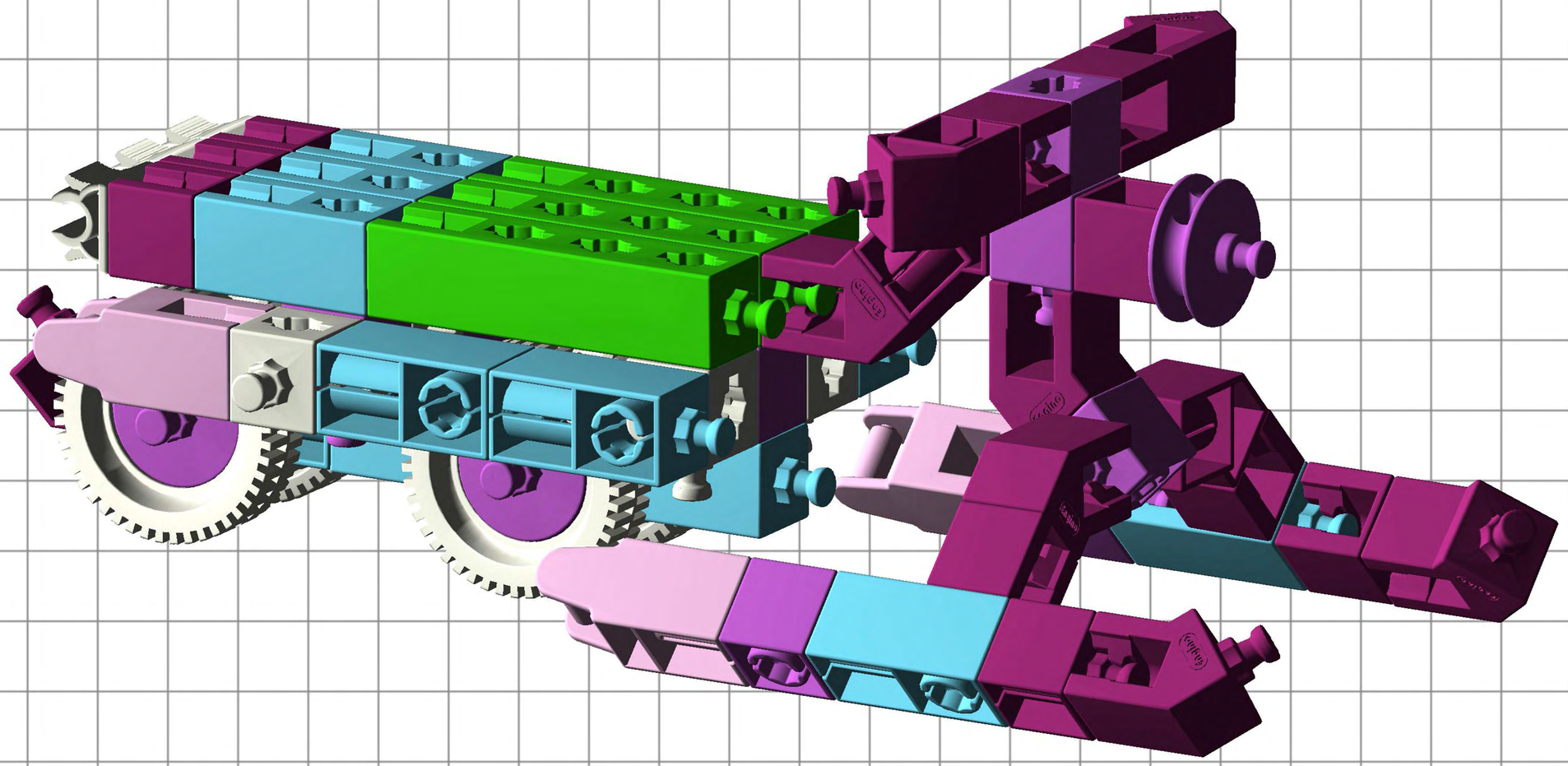

Snowmobile

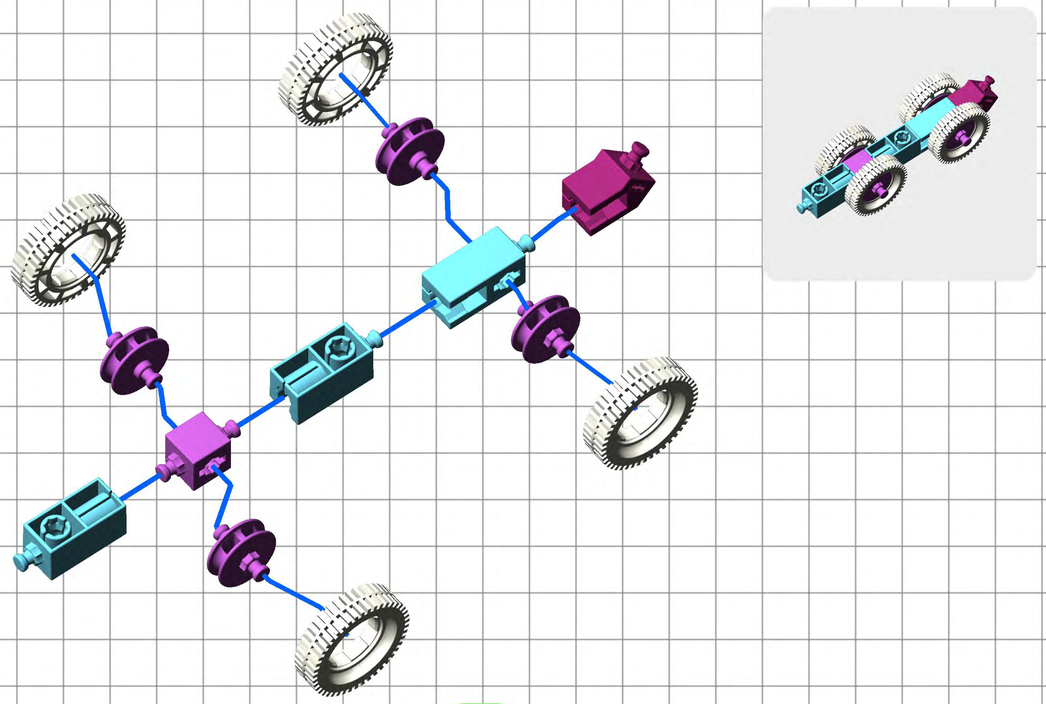

01

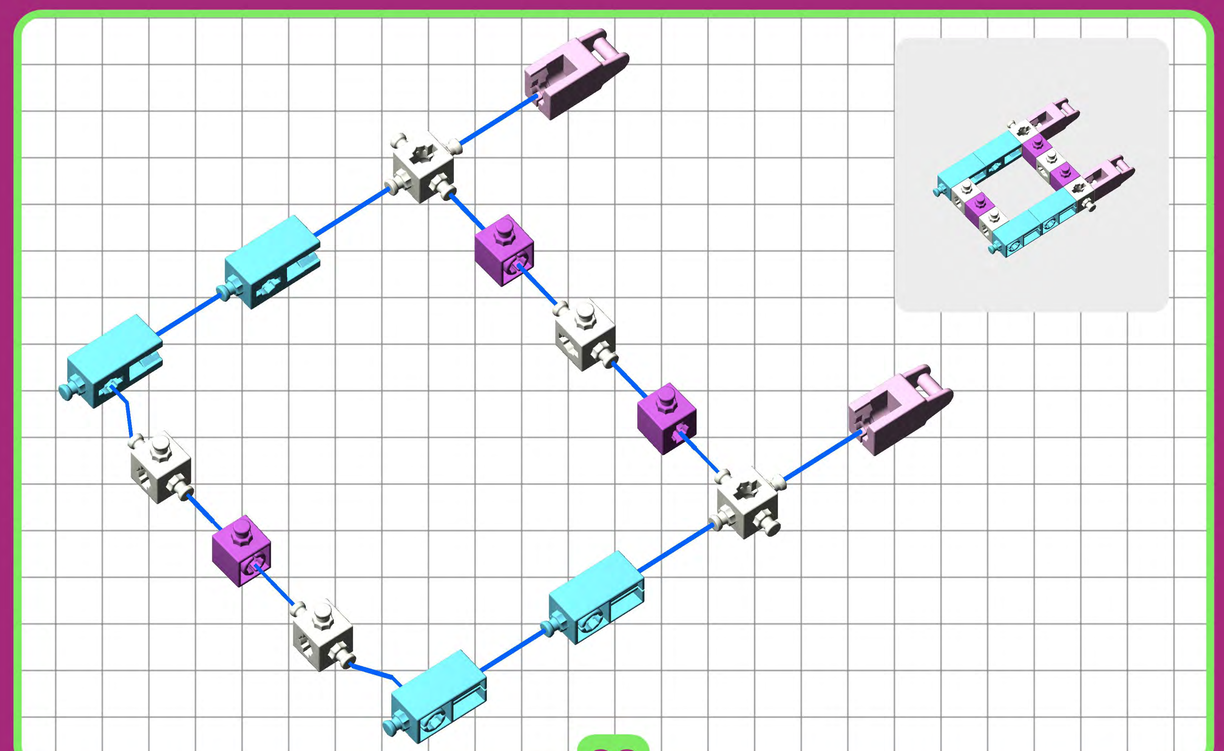

02

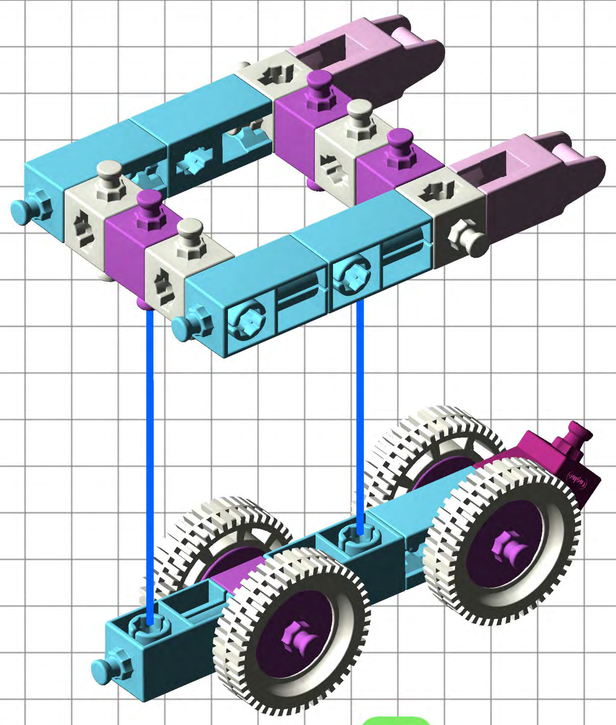

03

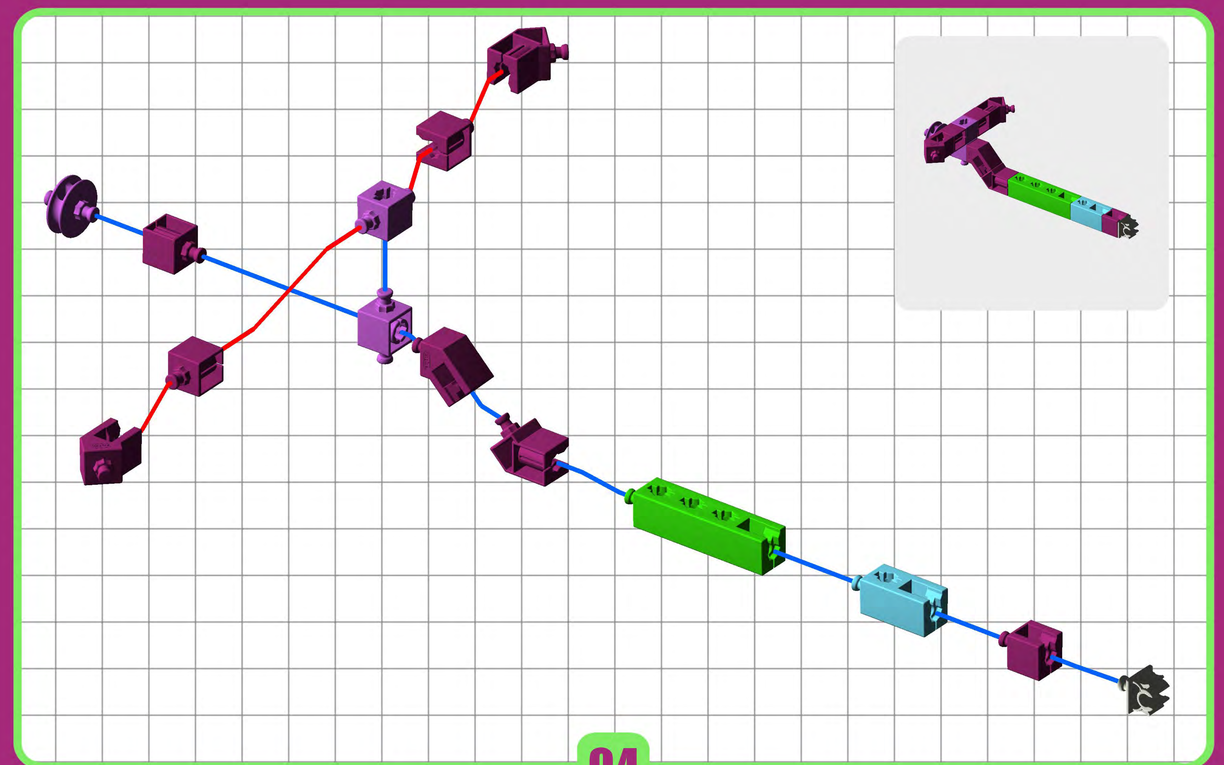

04

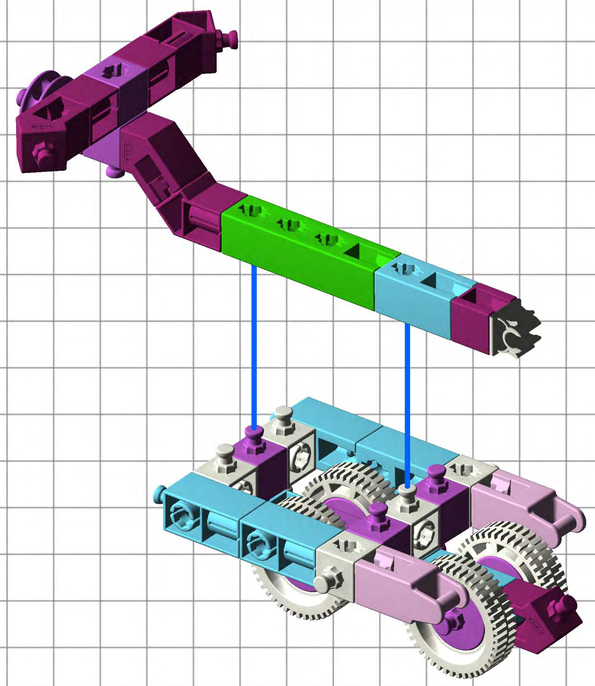

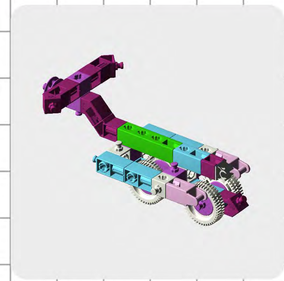

05

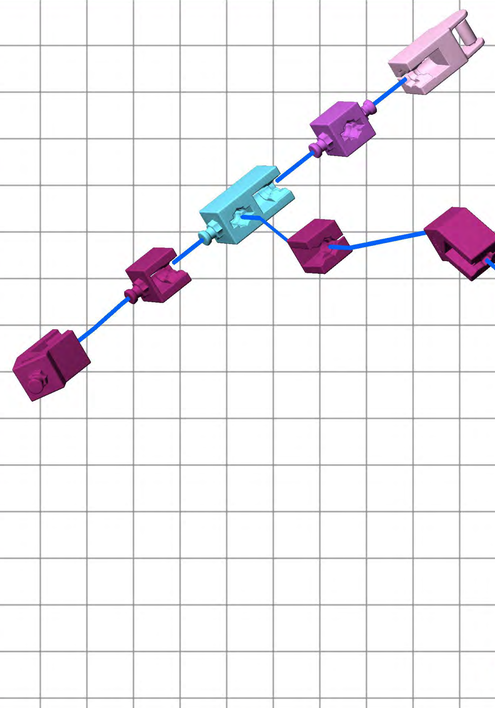

06

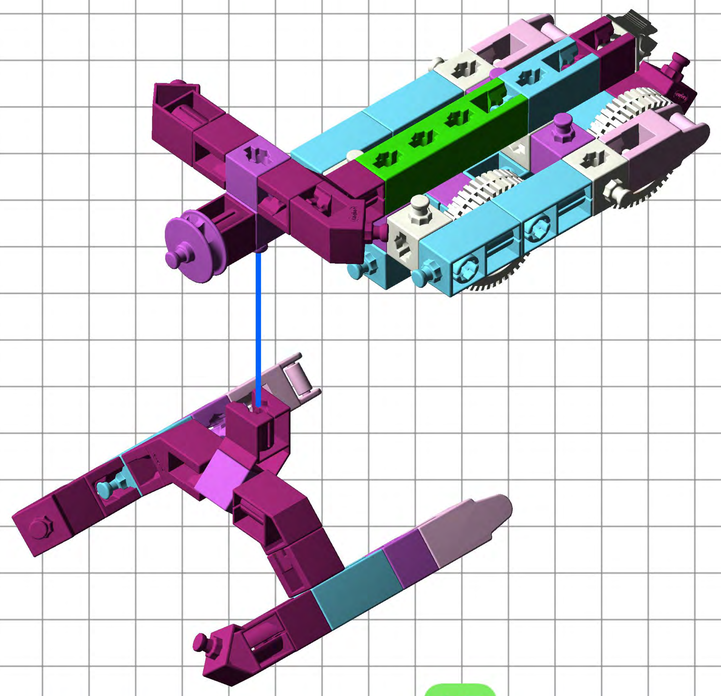

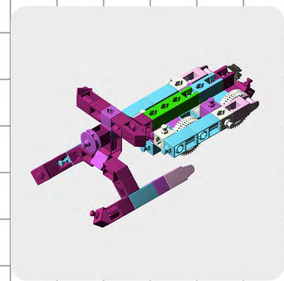

07

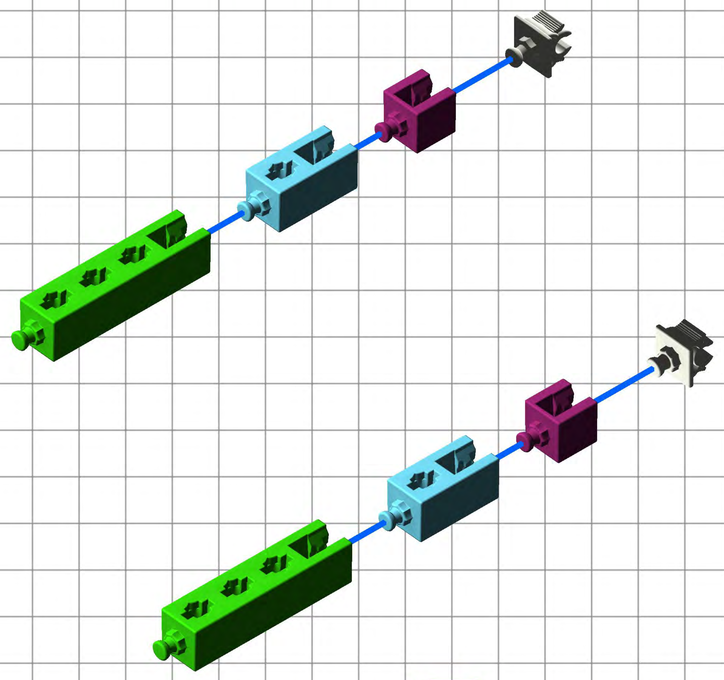

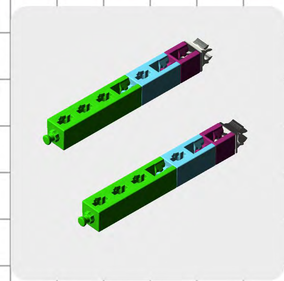

08

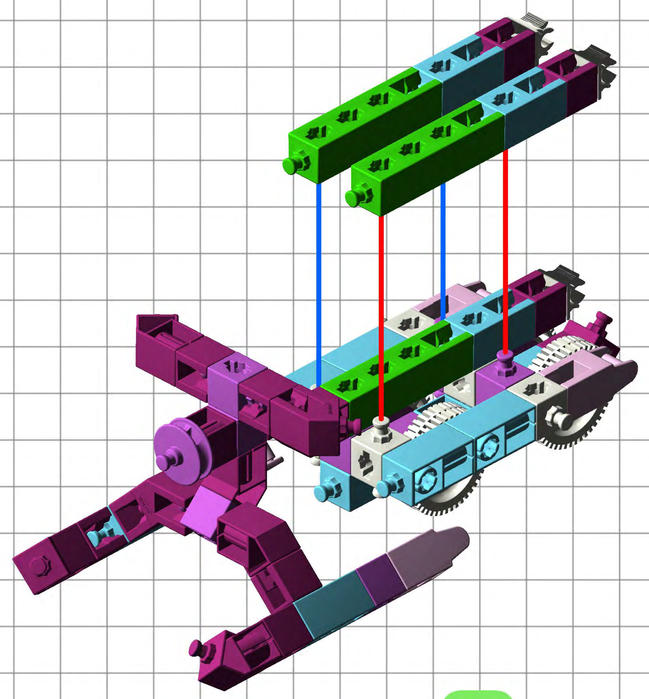

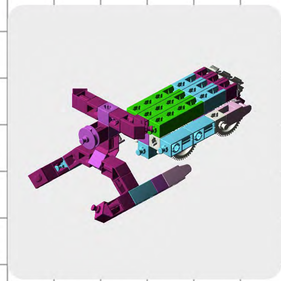

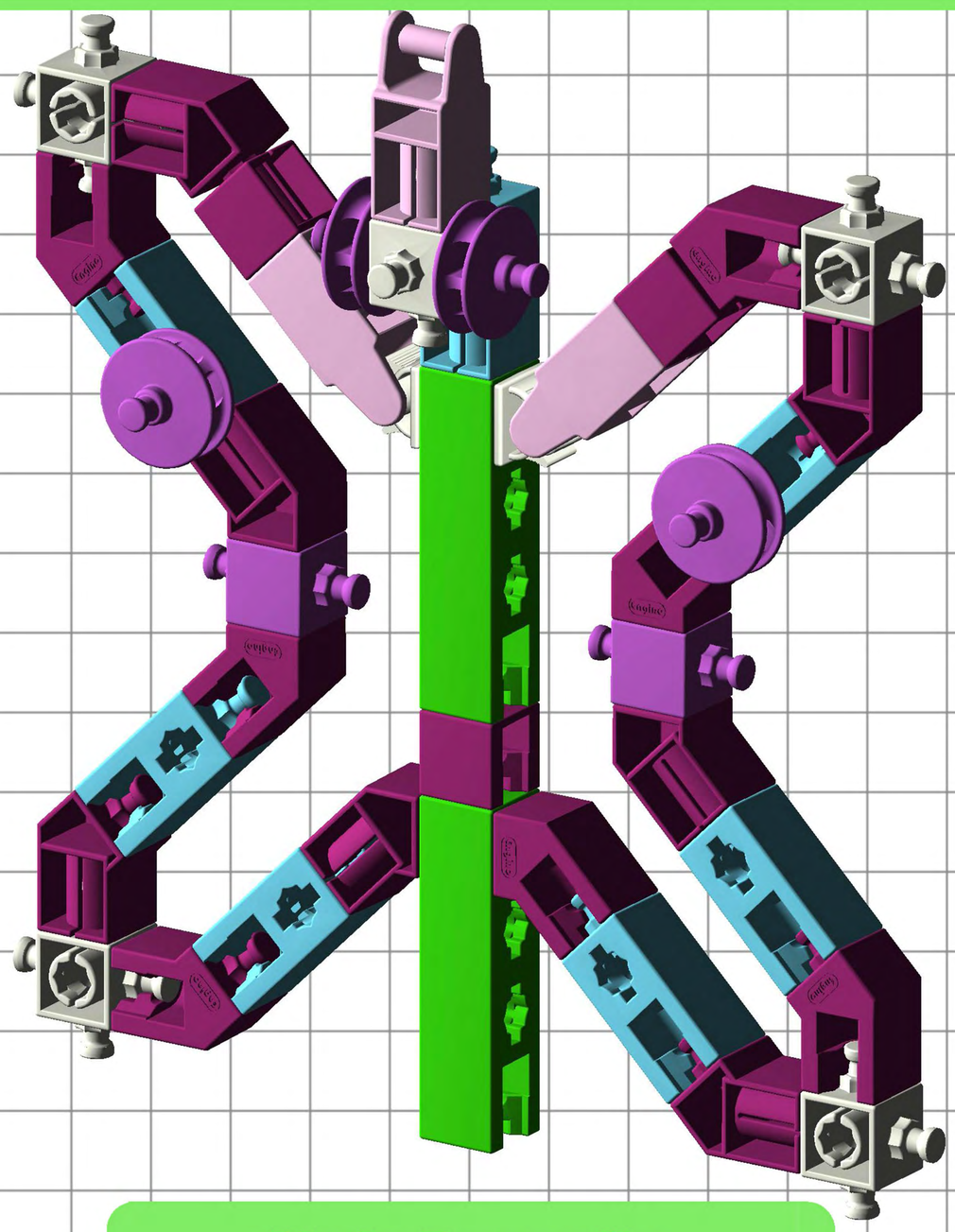

Little Butterfly

01

02

03

04

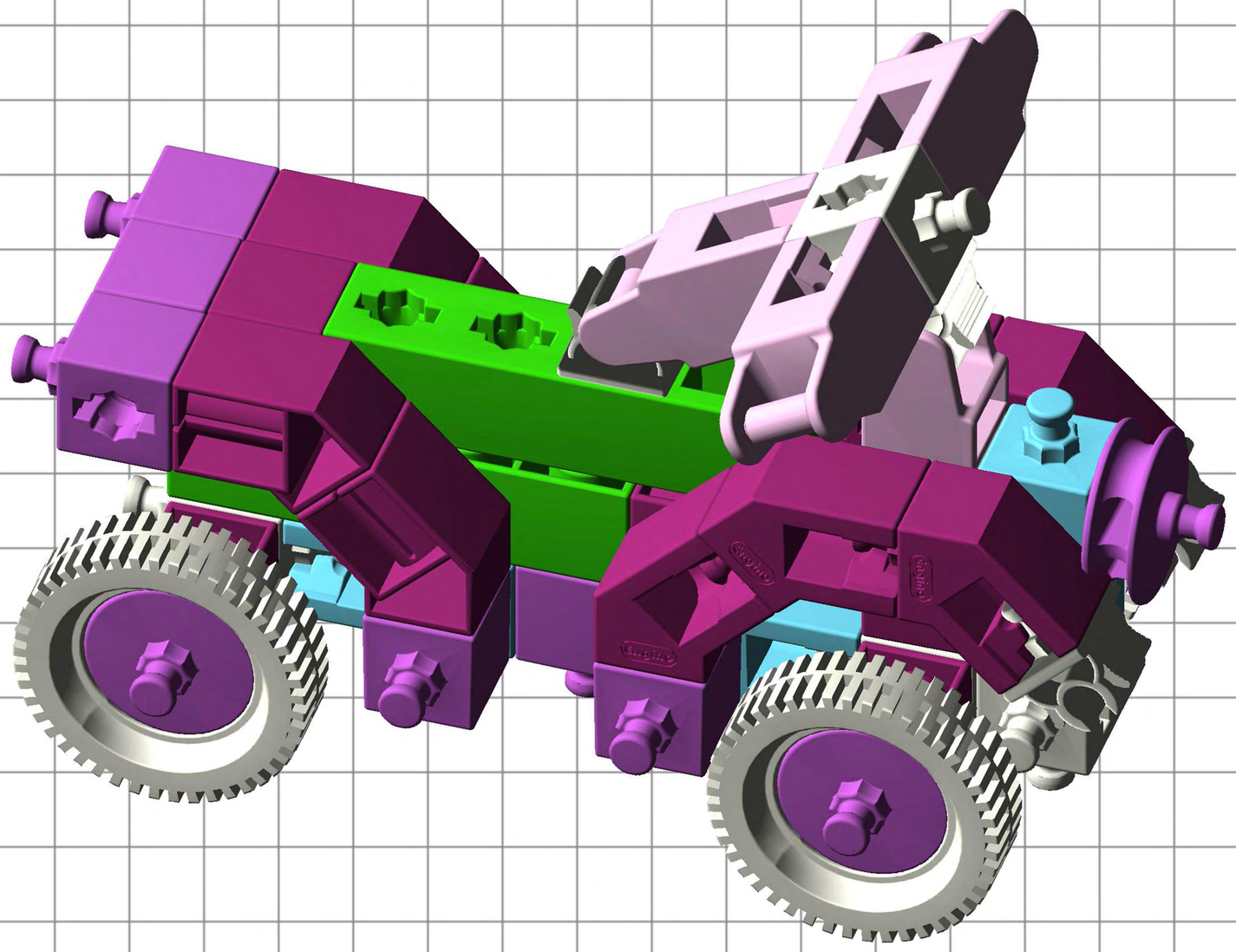

Quad Bike

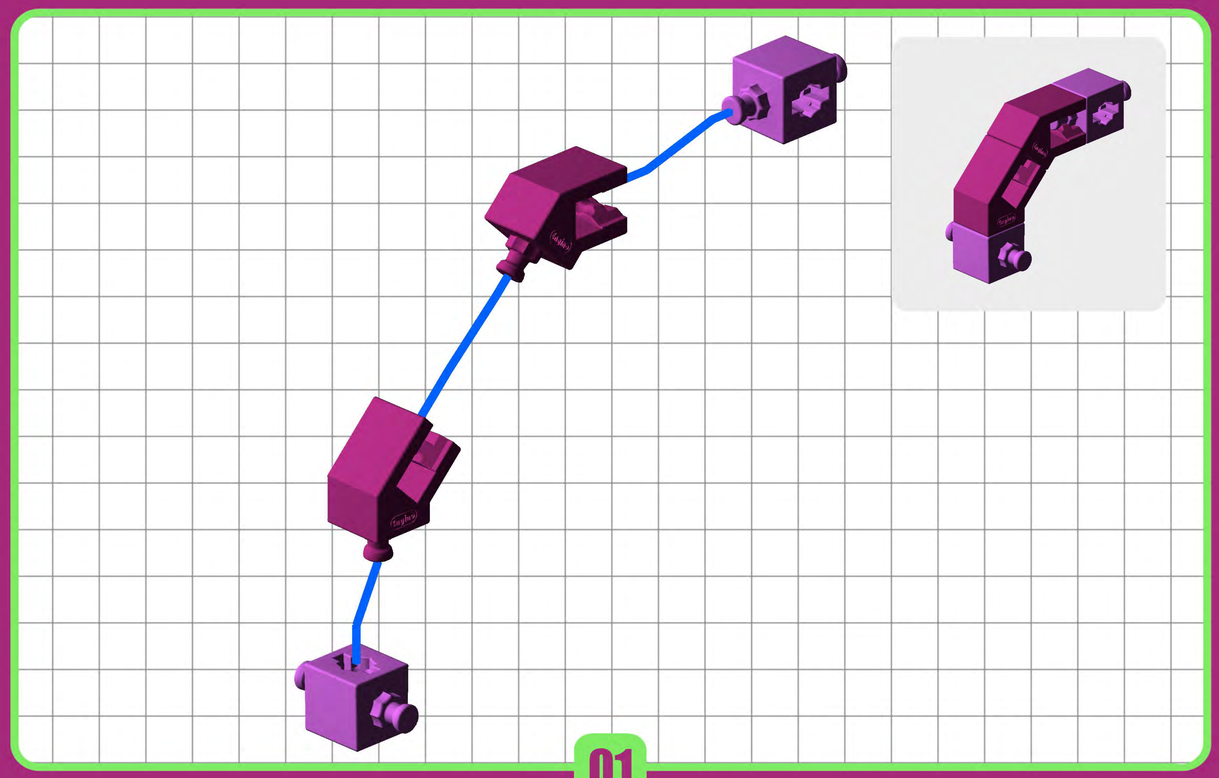

01

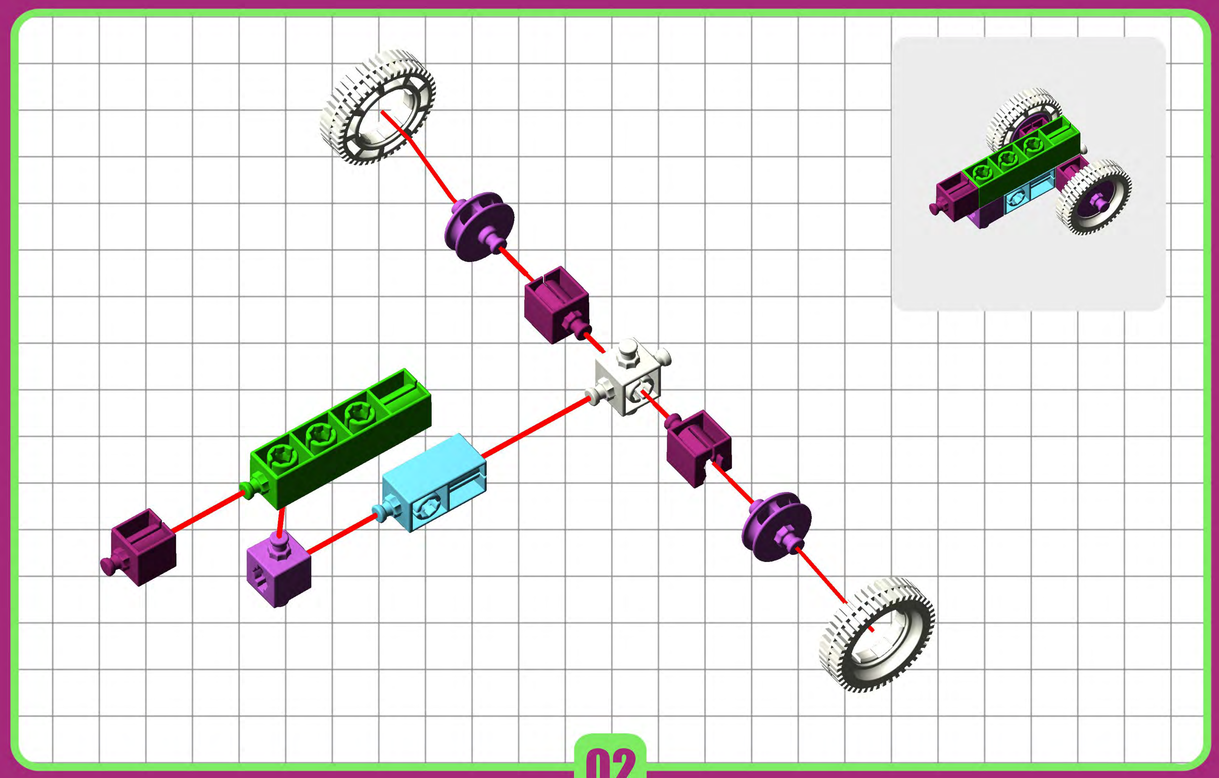

02

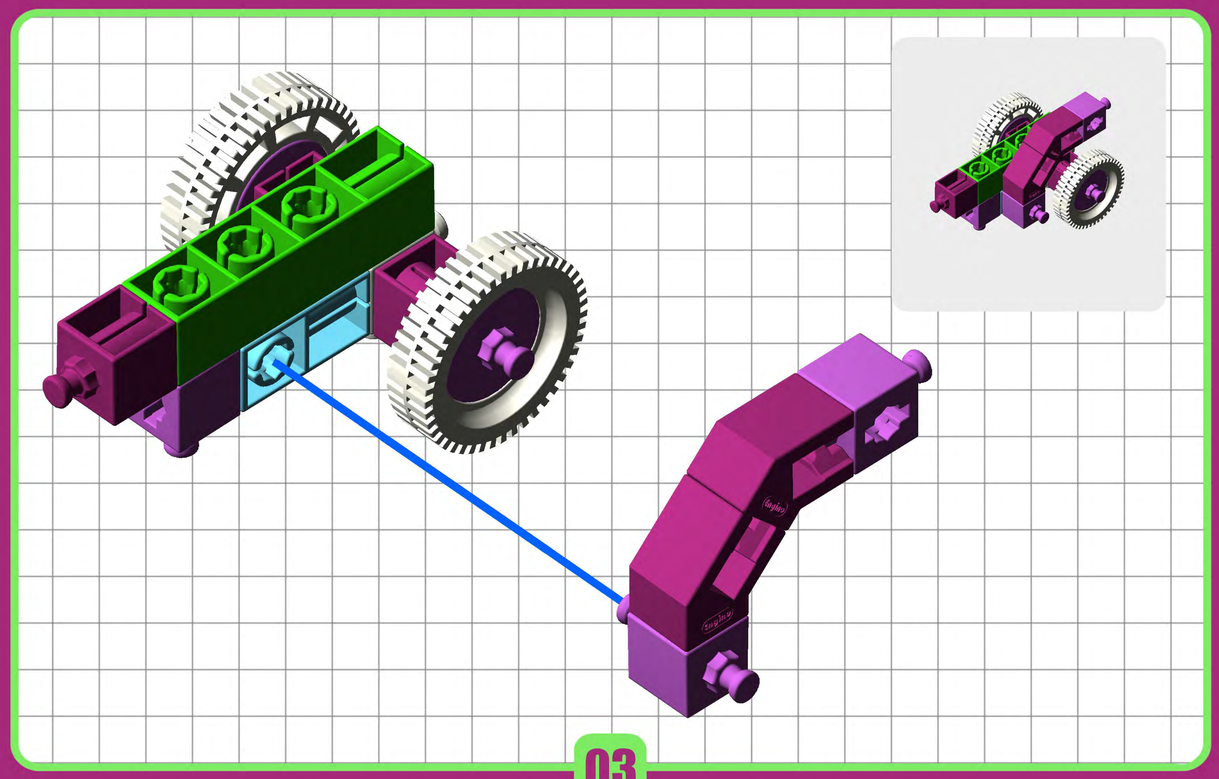

03

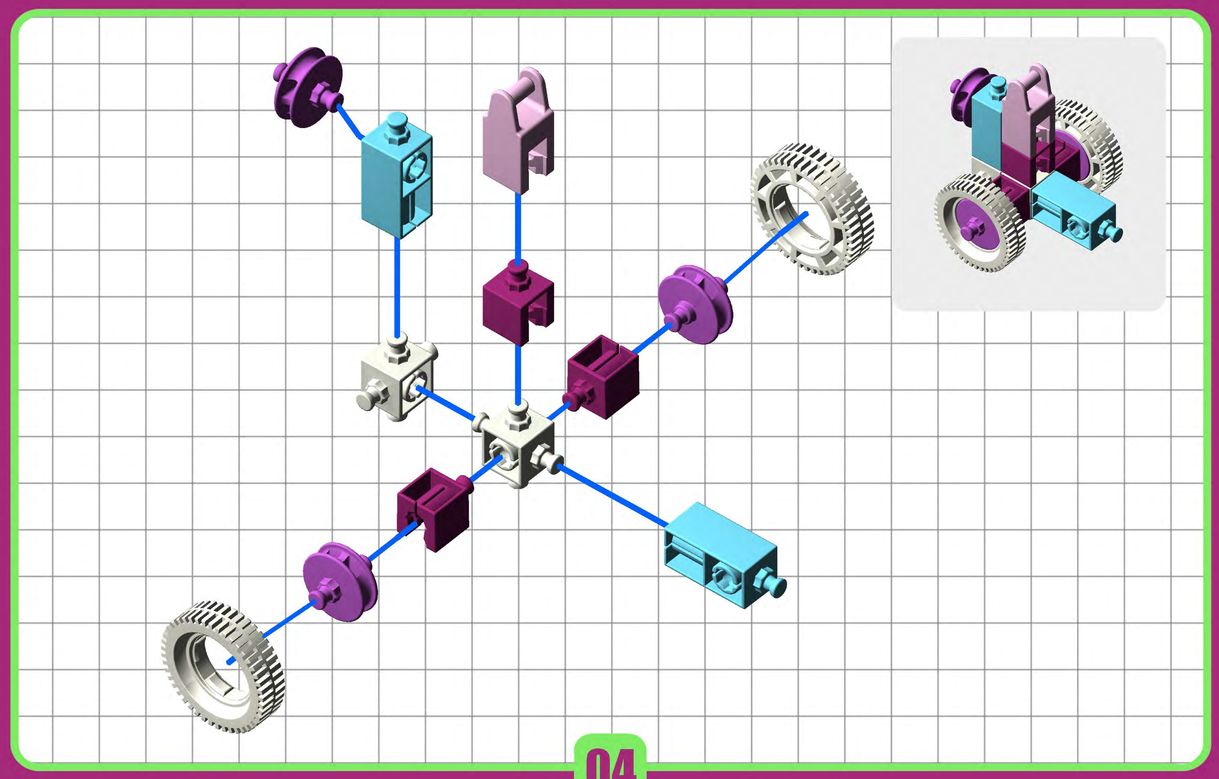

04

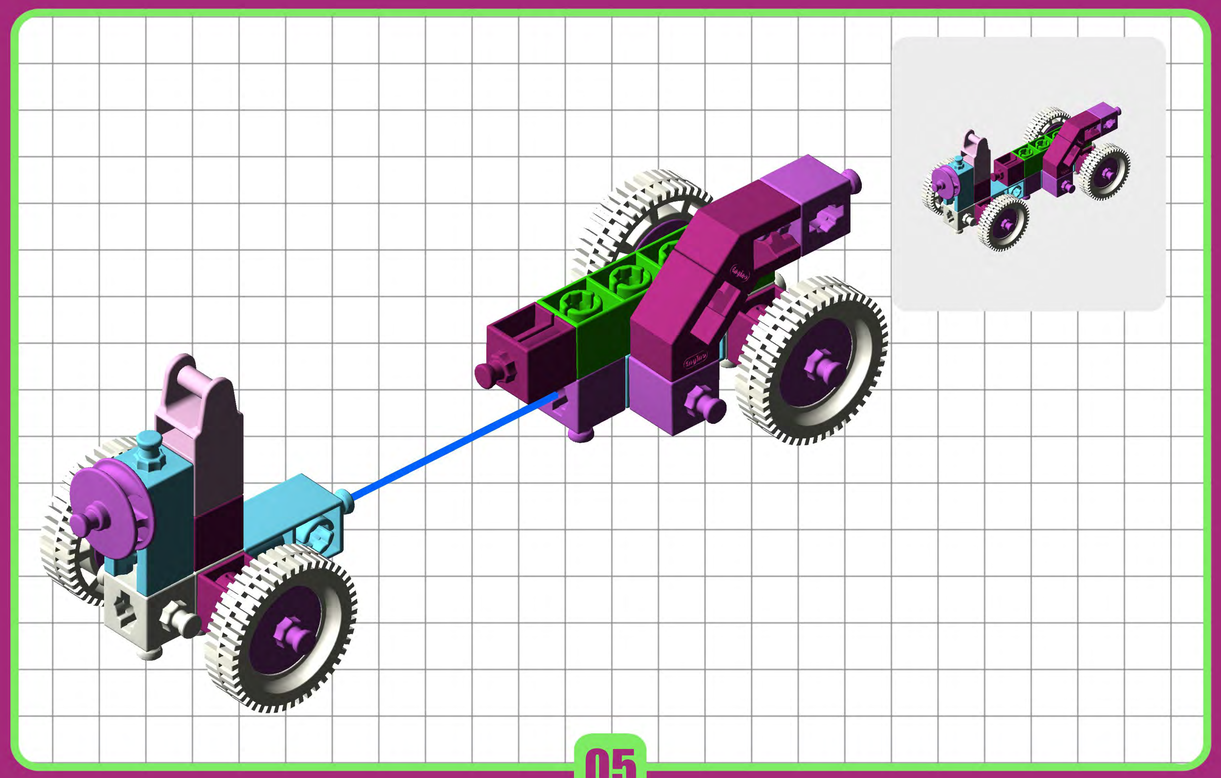

05

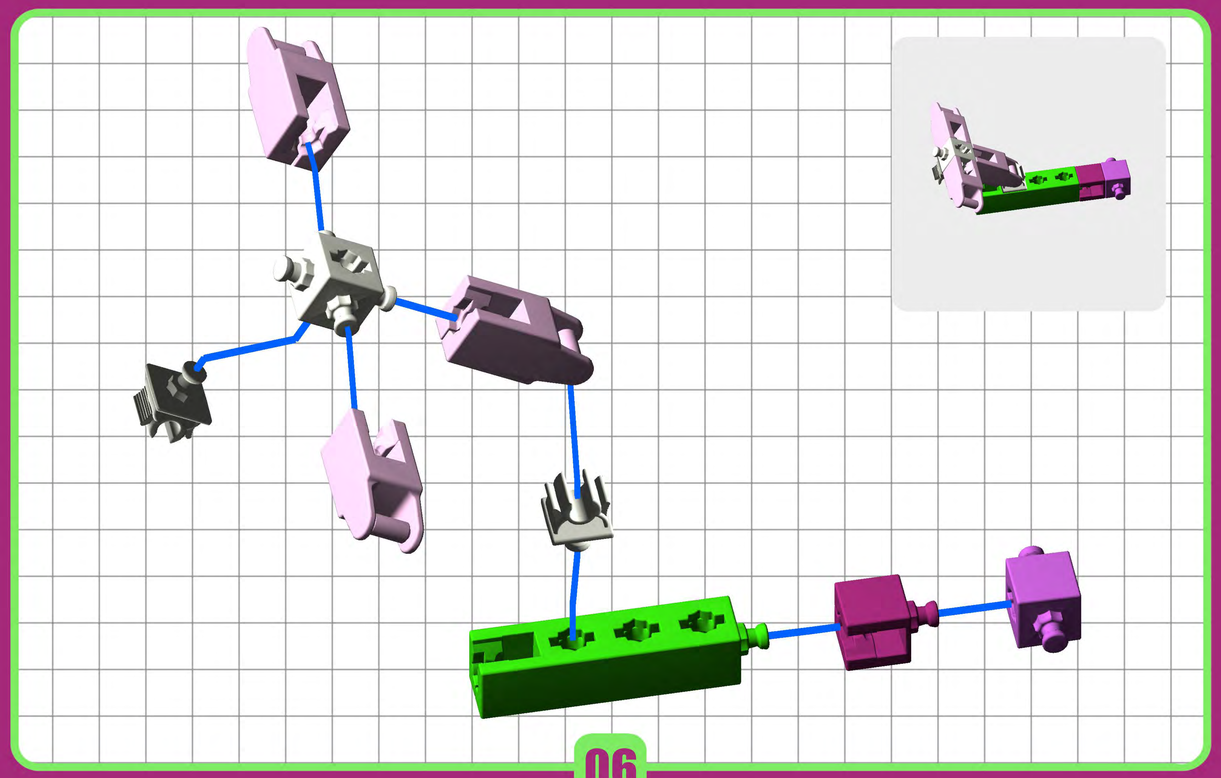

06

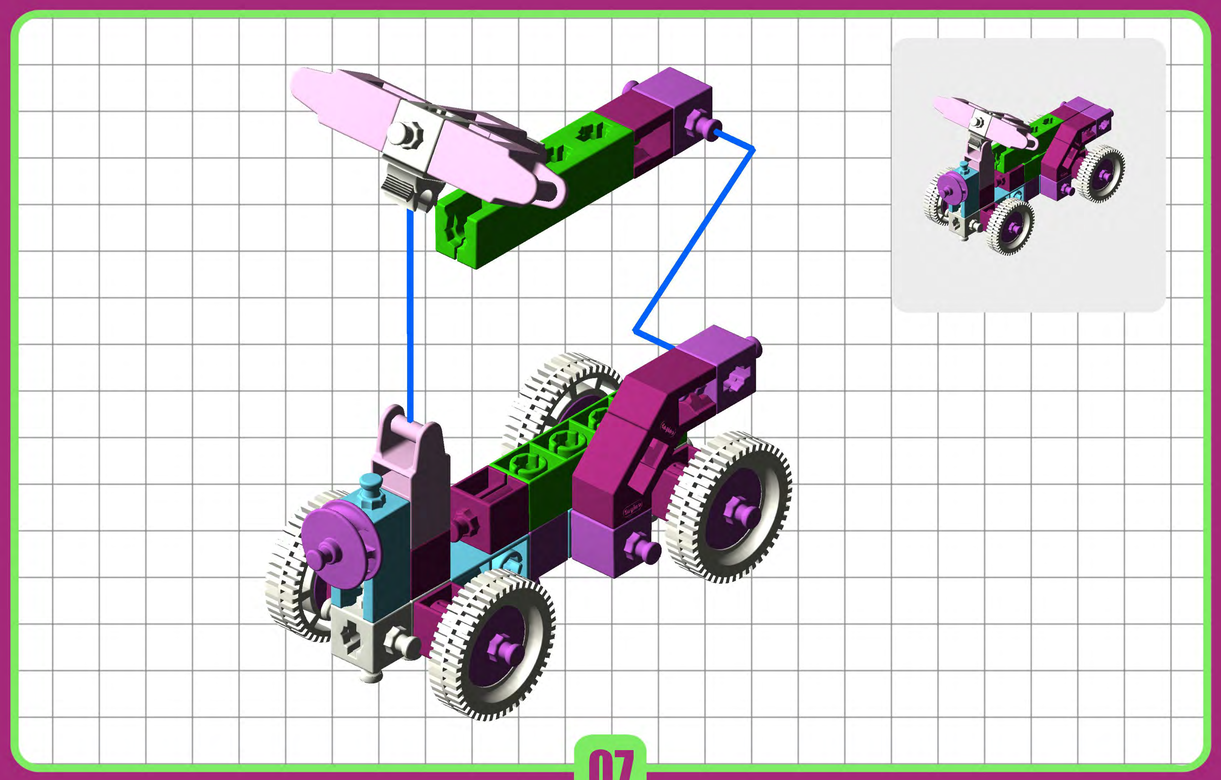

07

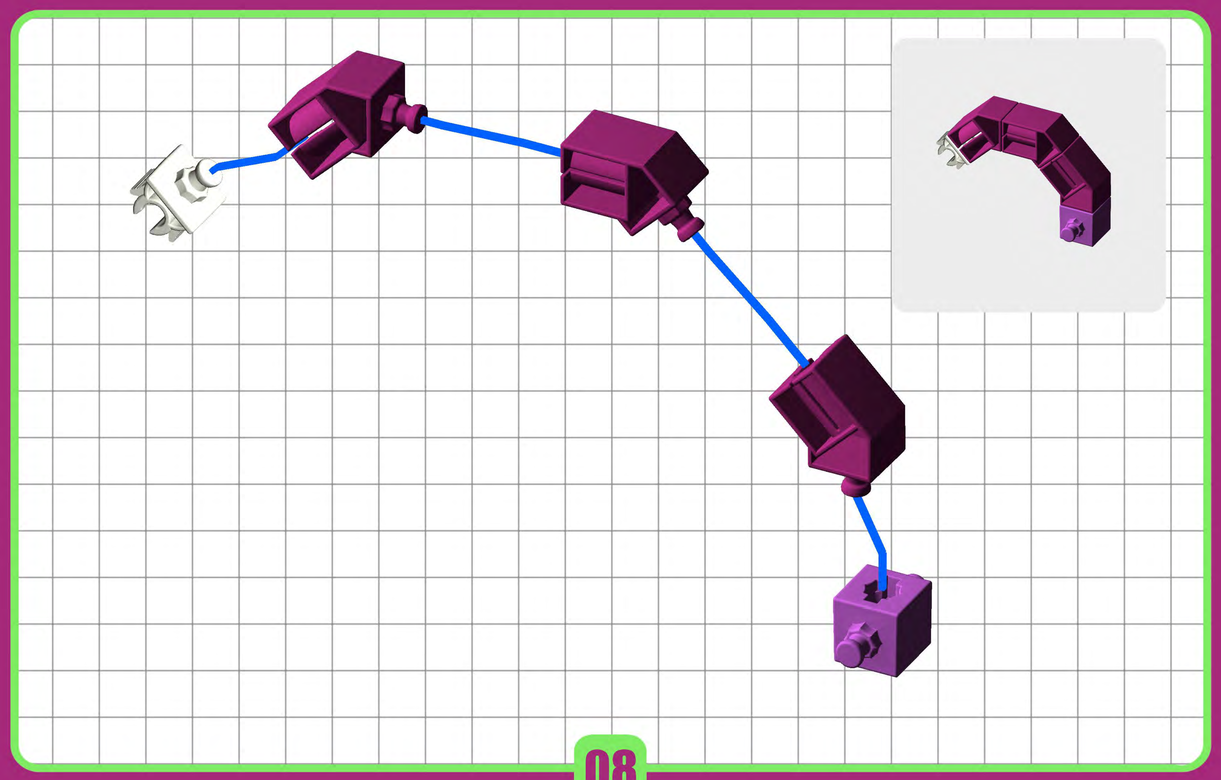

08

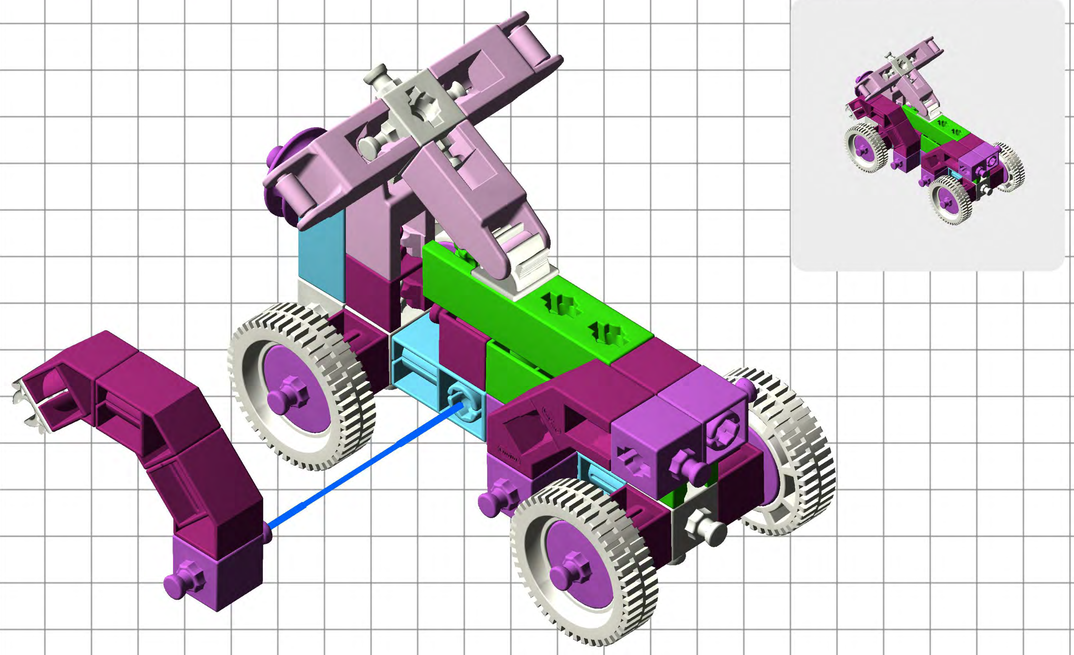

09

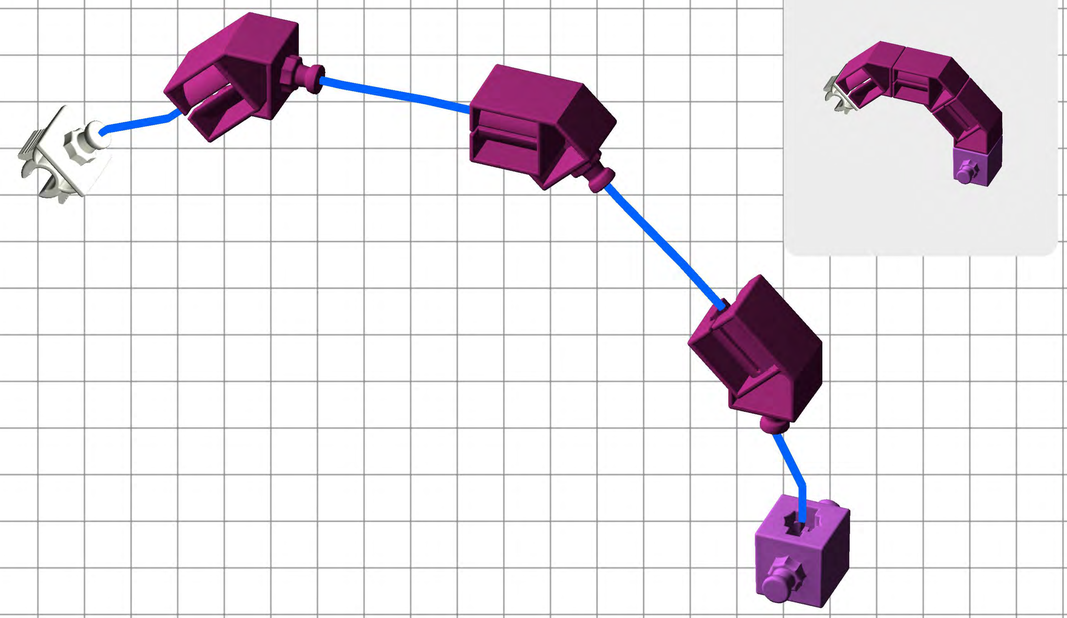

10

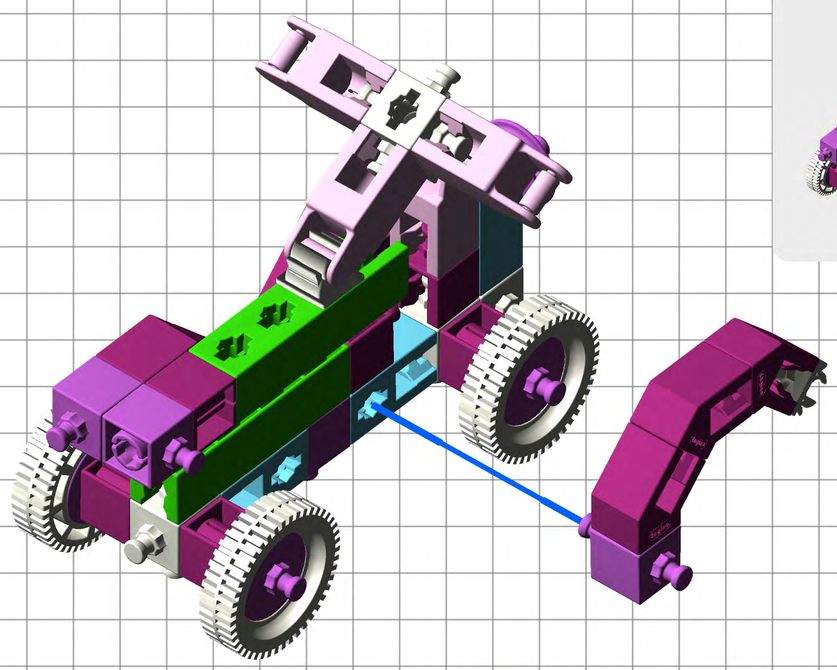

11

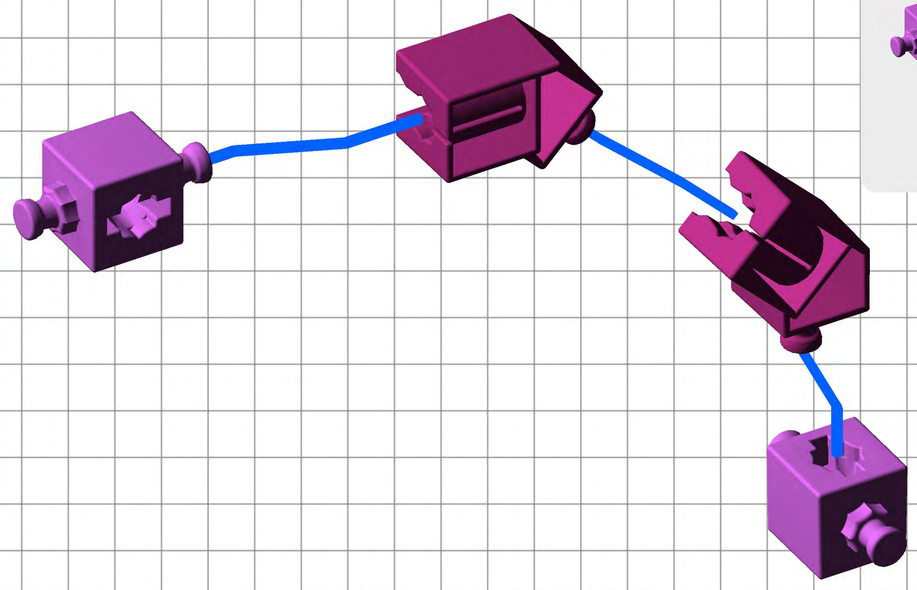

12

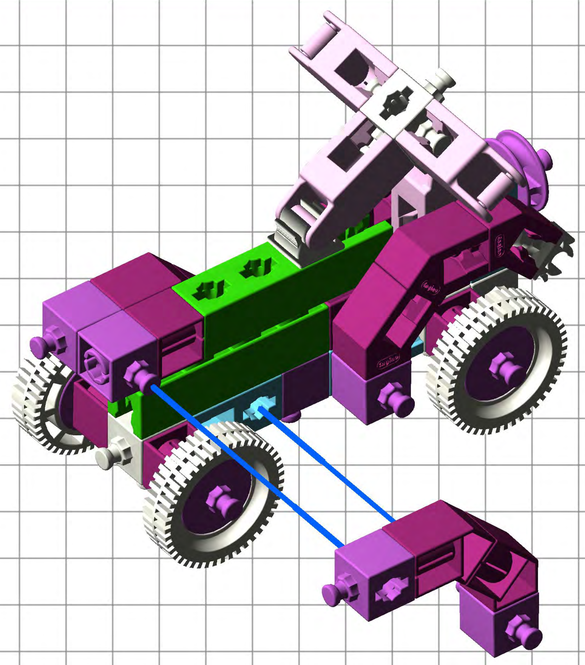

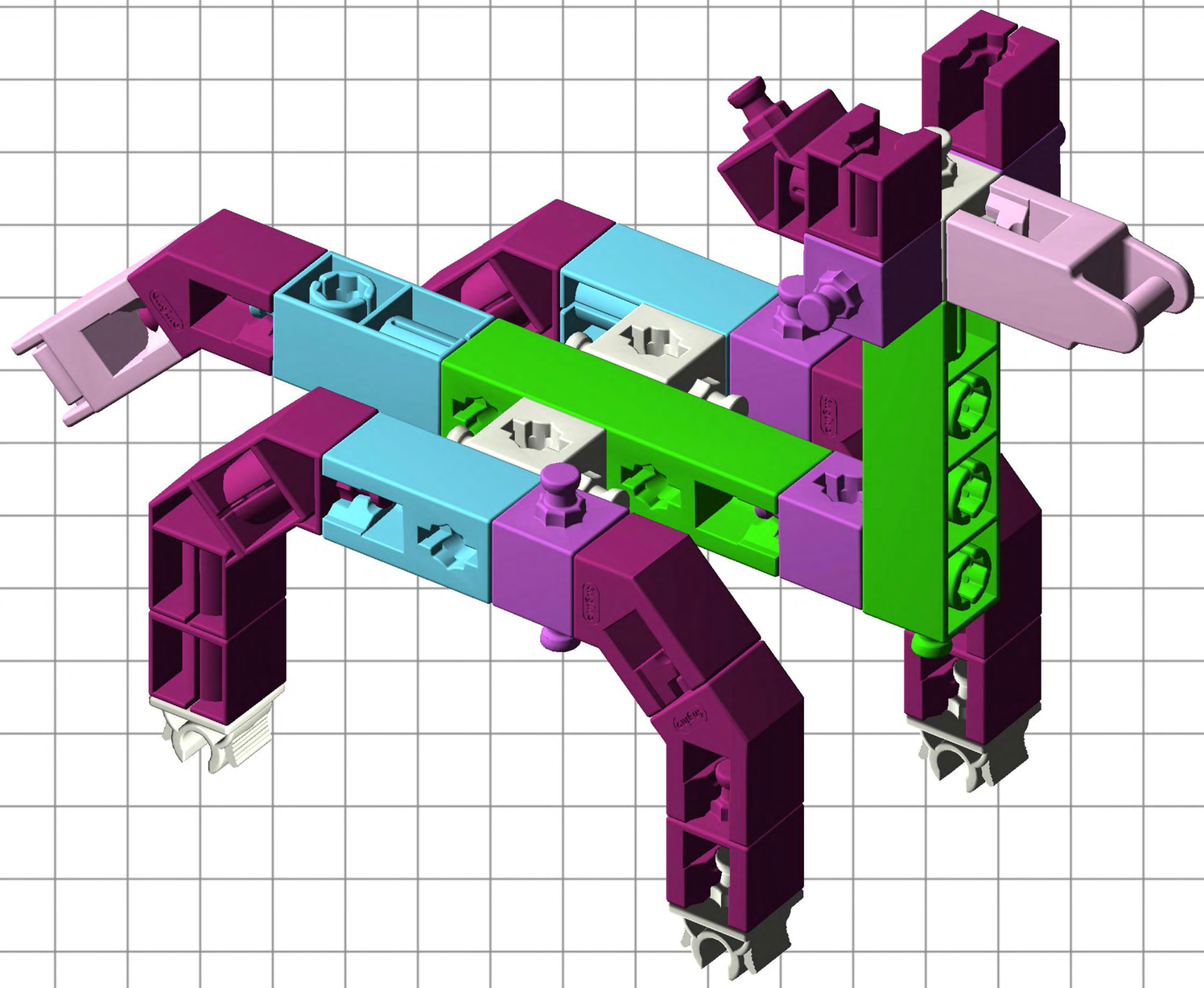

Sheep

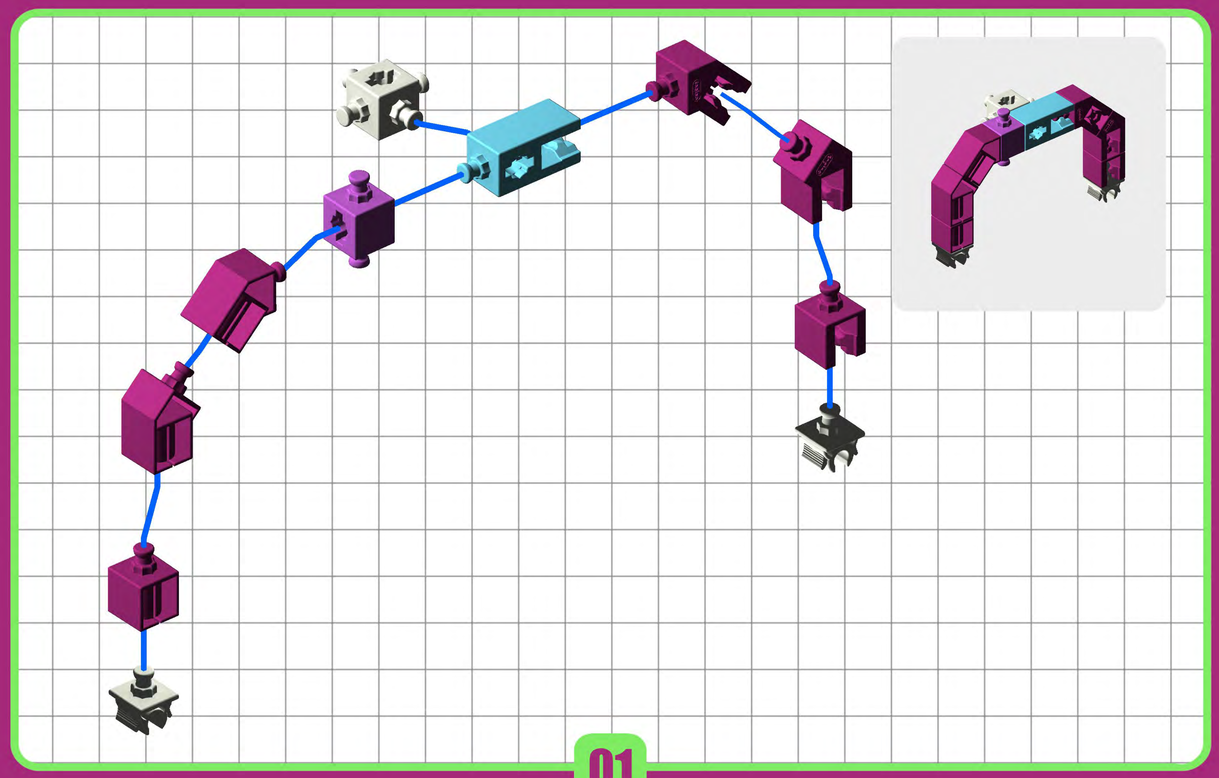

01

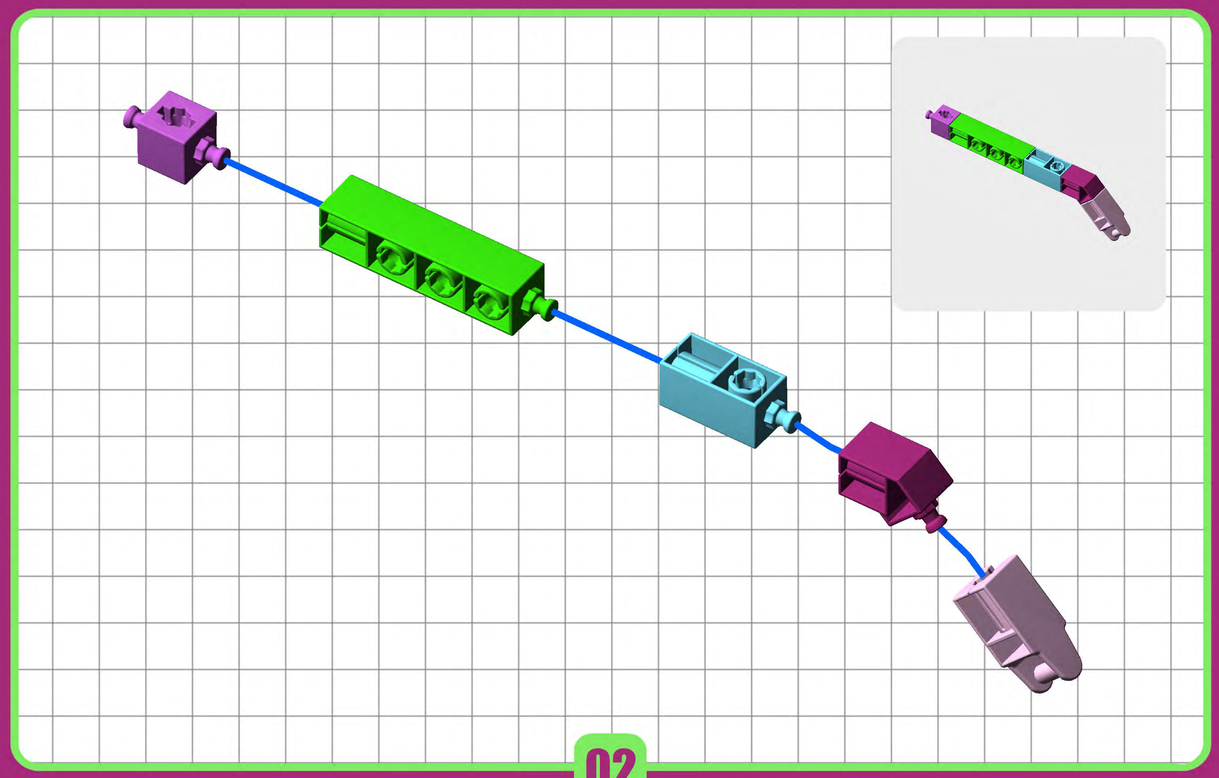

02

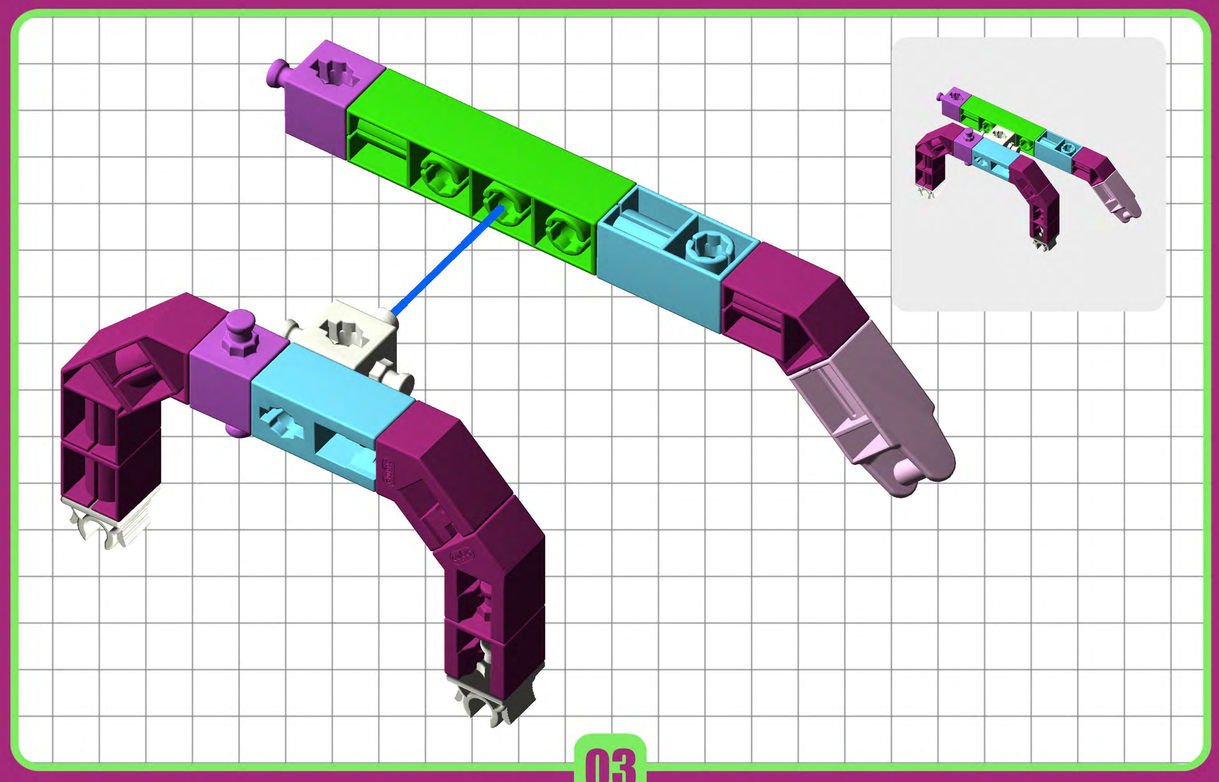

03

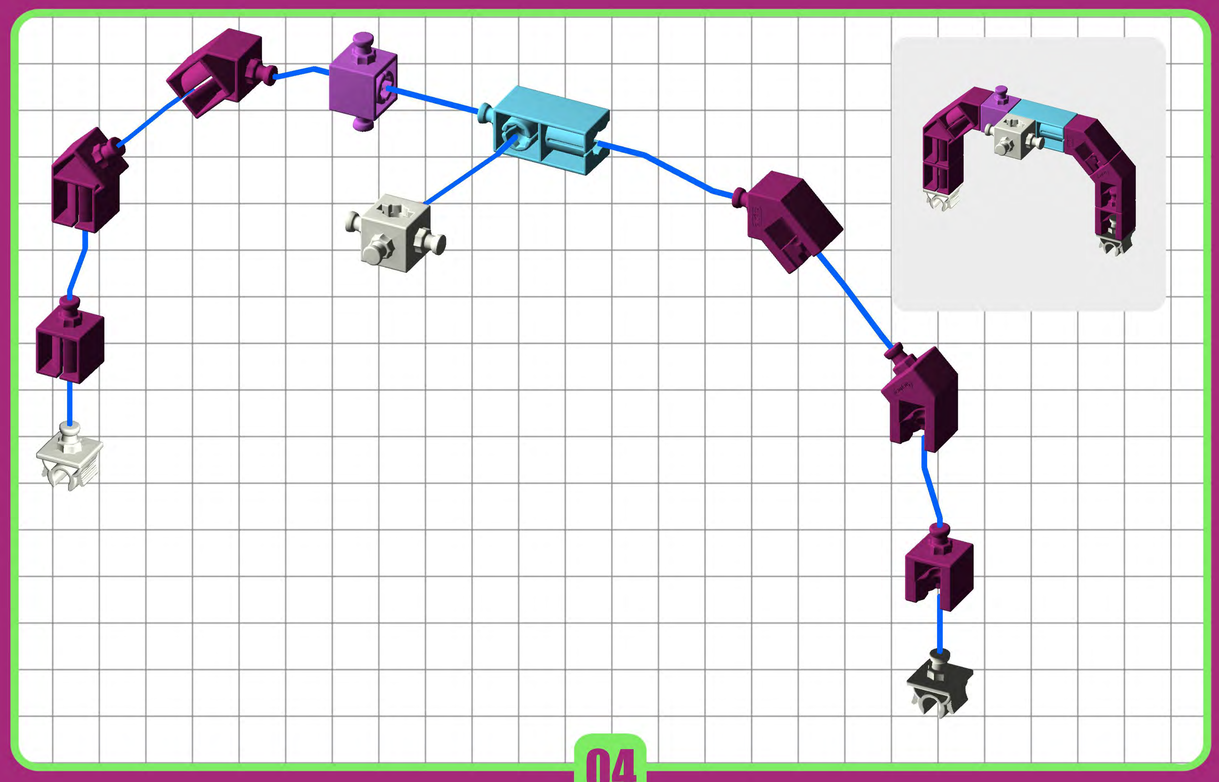

04

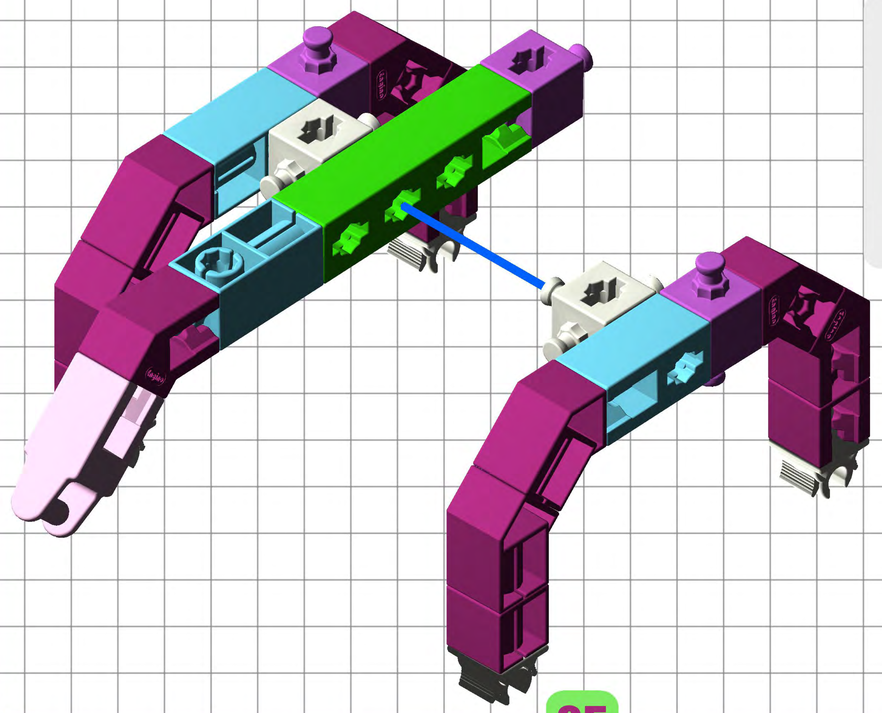

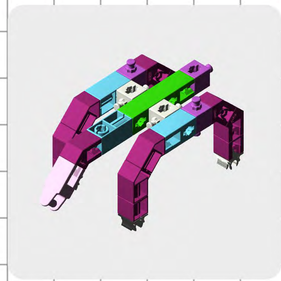

05

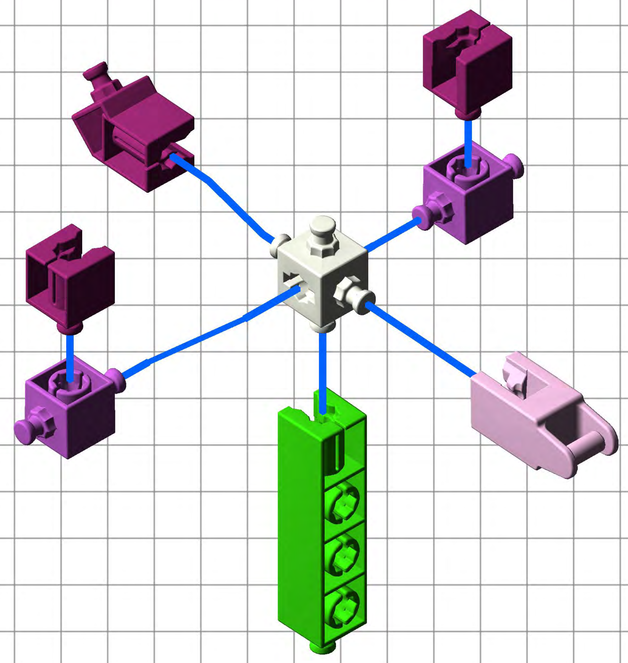

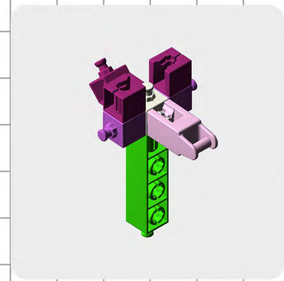

06

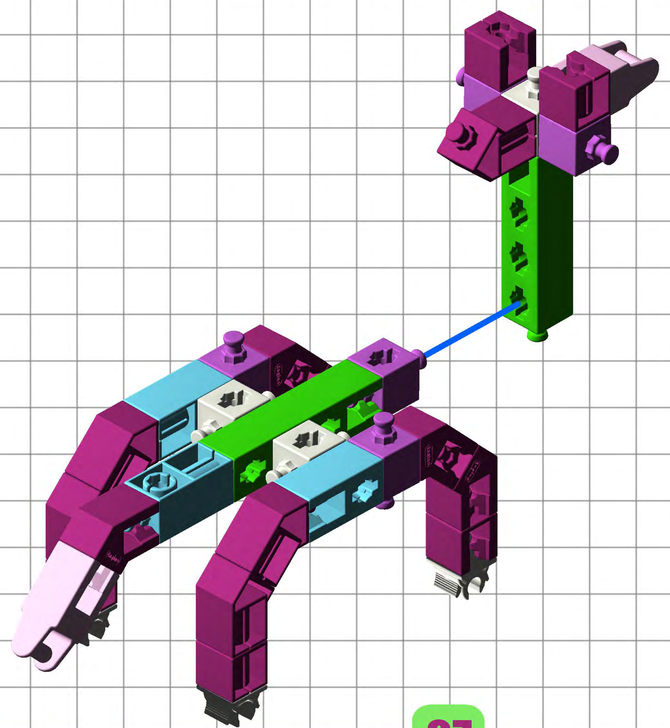

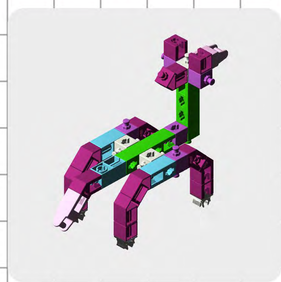

07

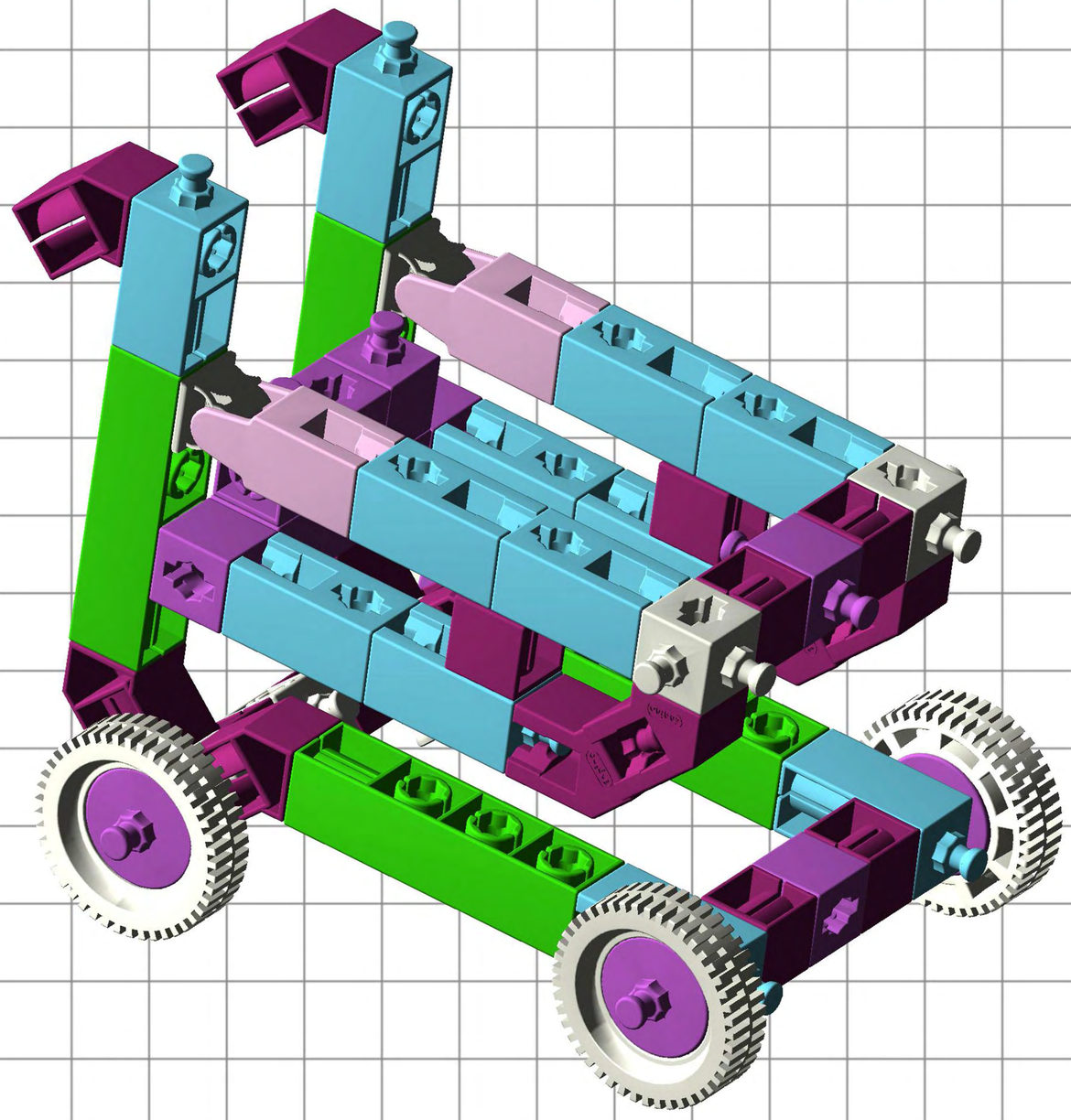

Shopping Trolley

01

02

03

04

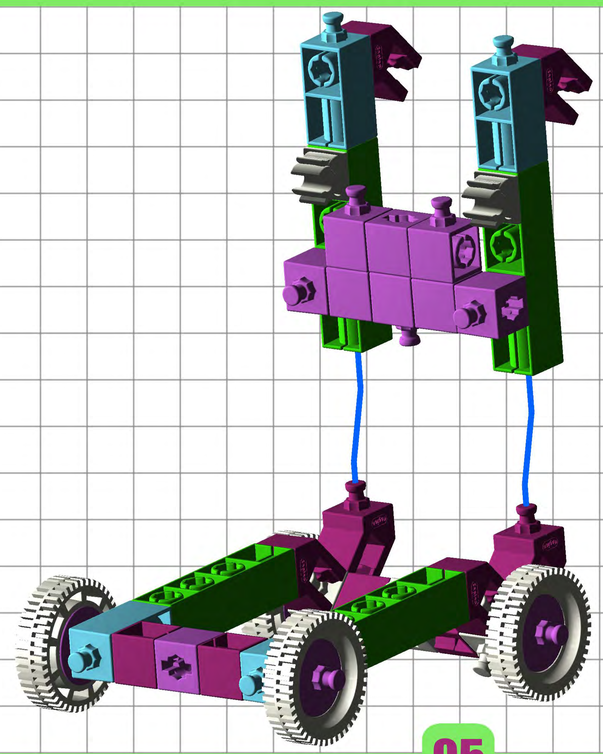

05

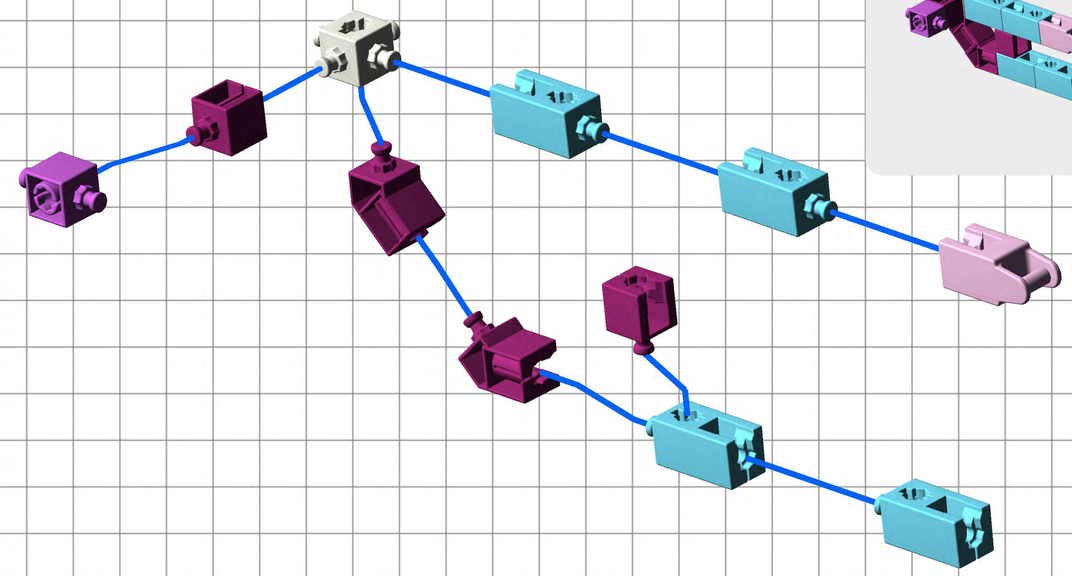

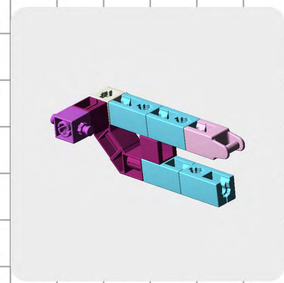

06

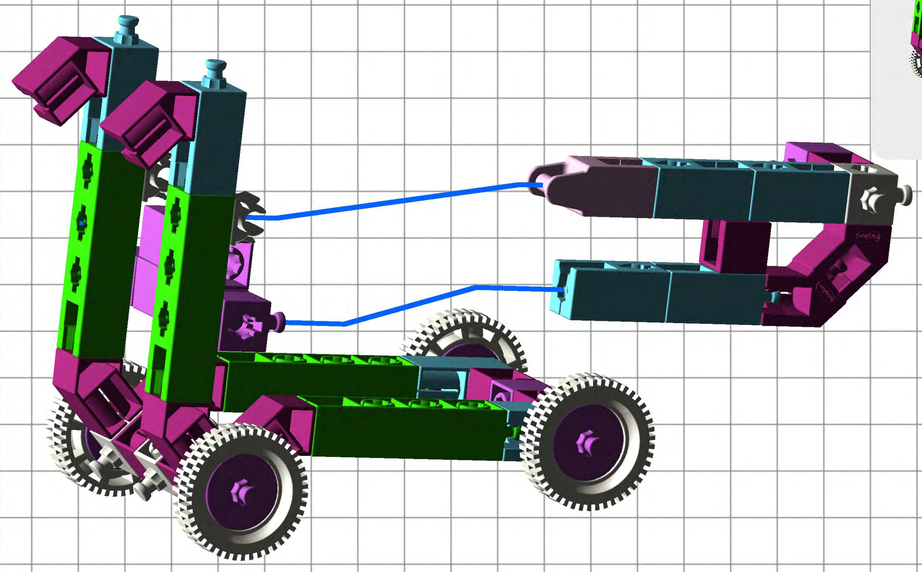

07

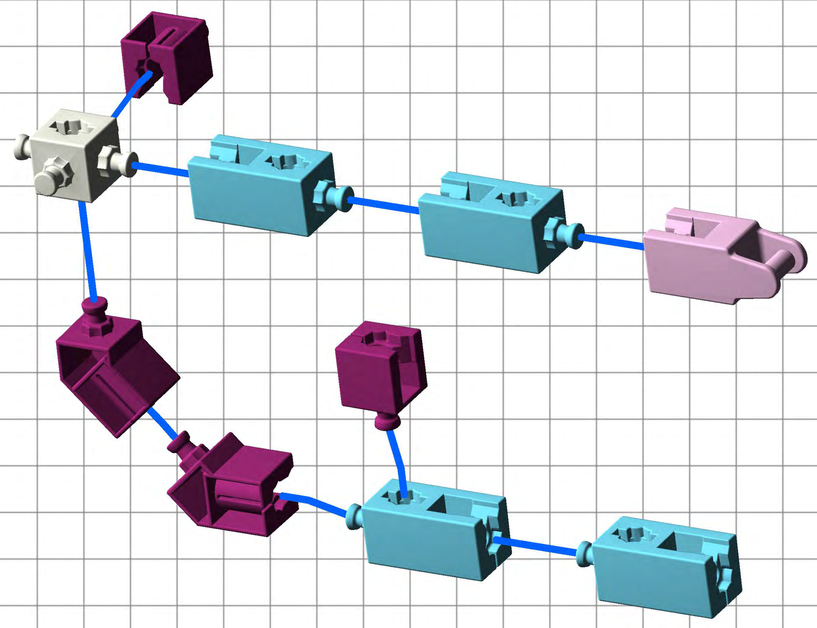

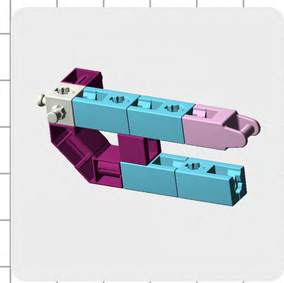

08

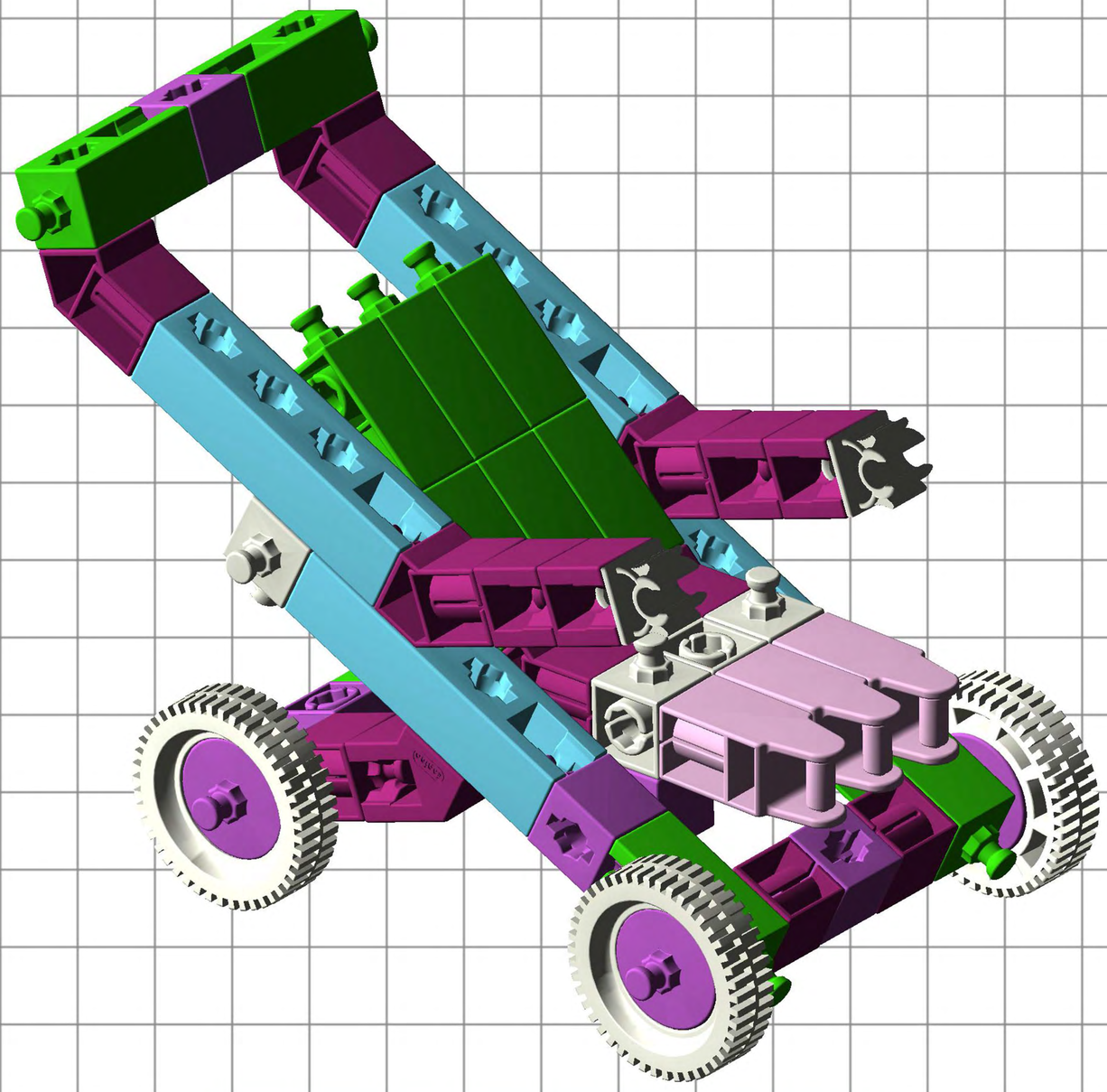

Stroller

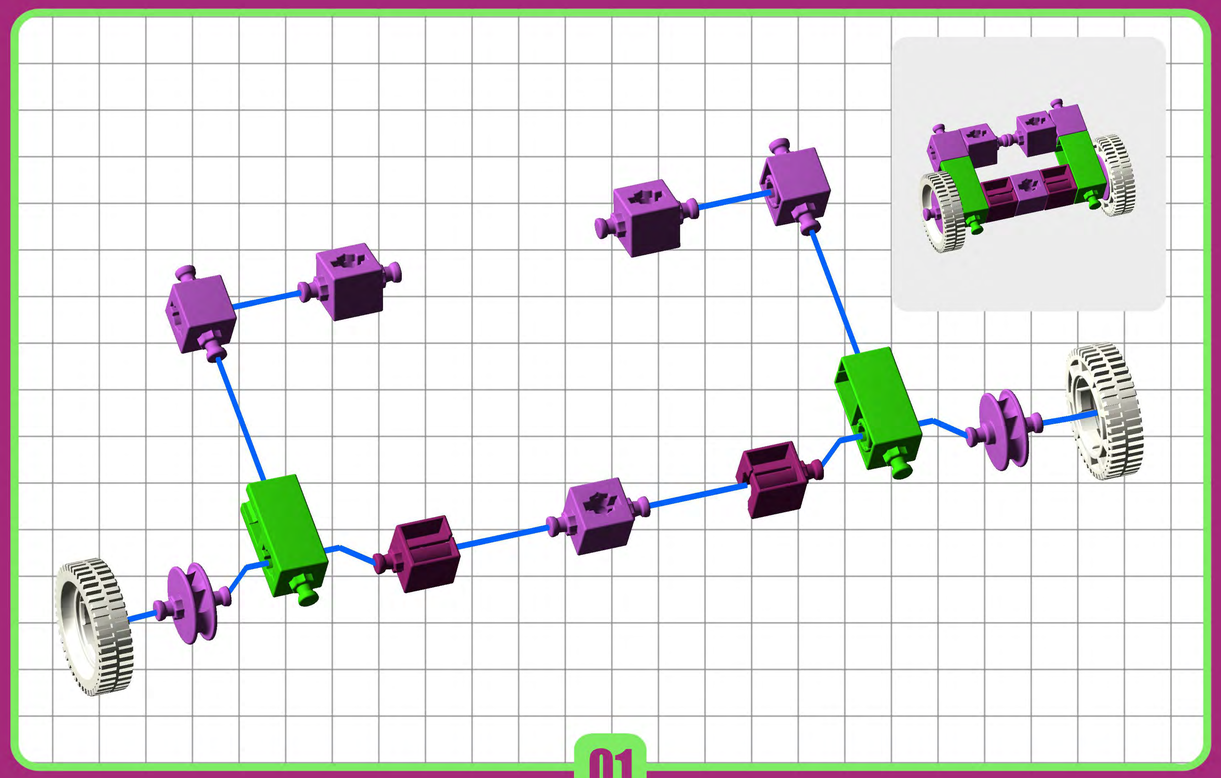

01

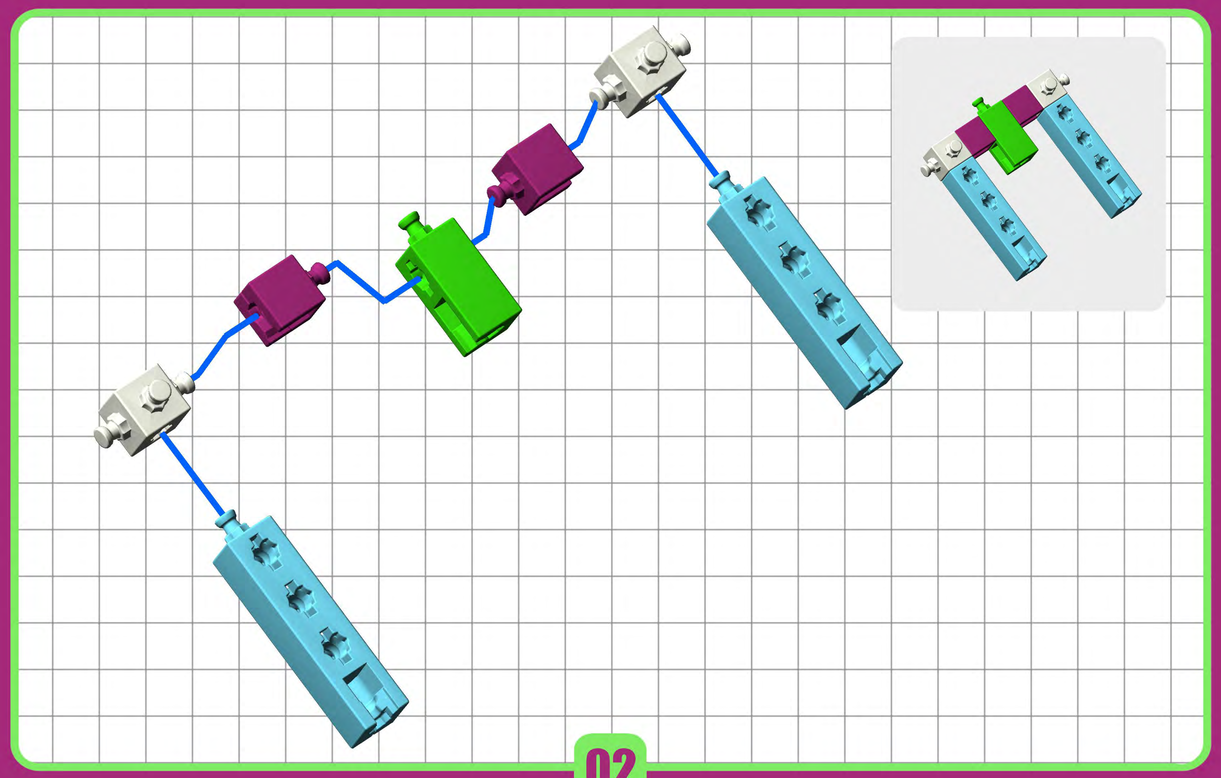

02

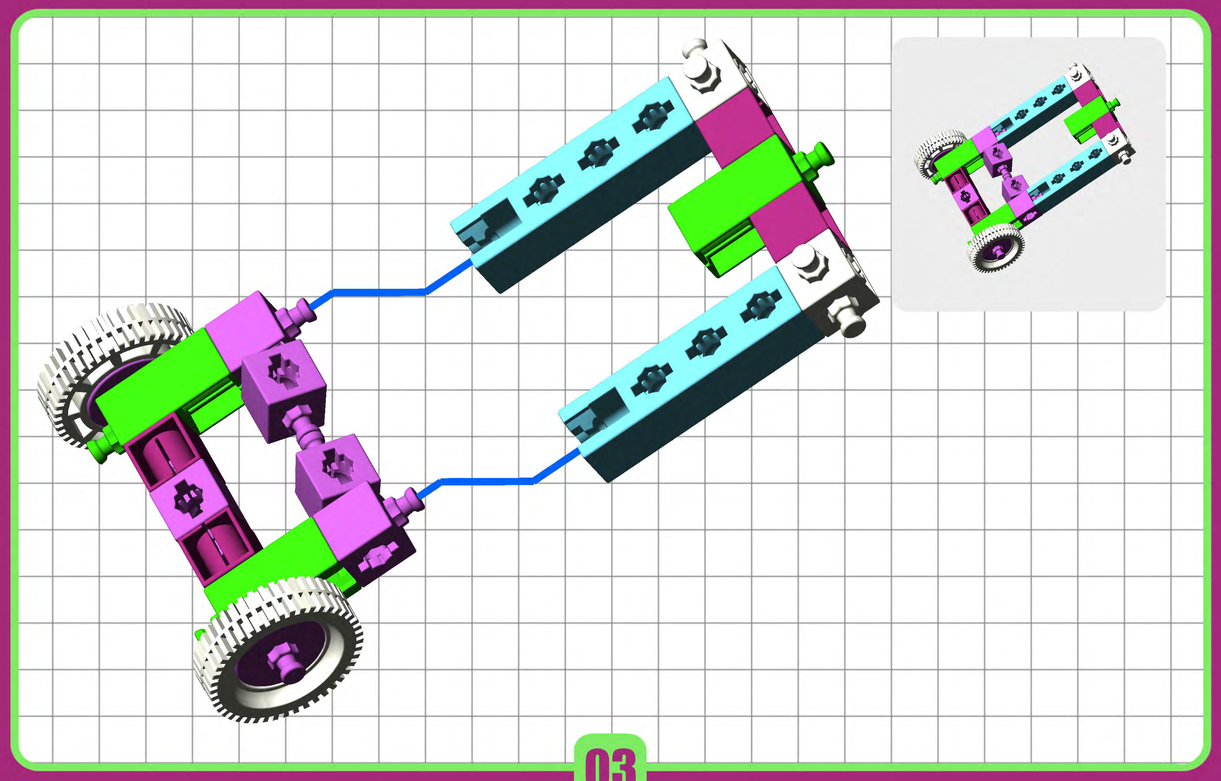

03

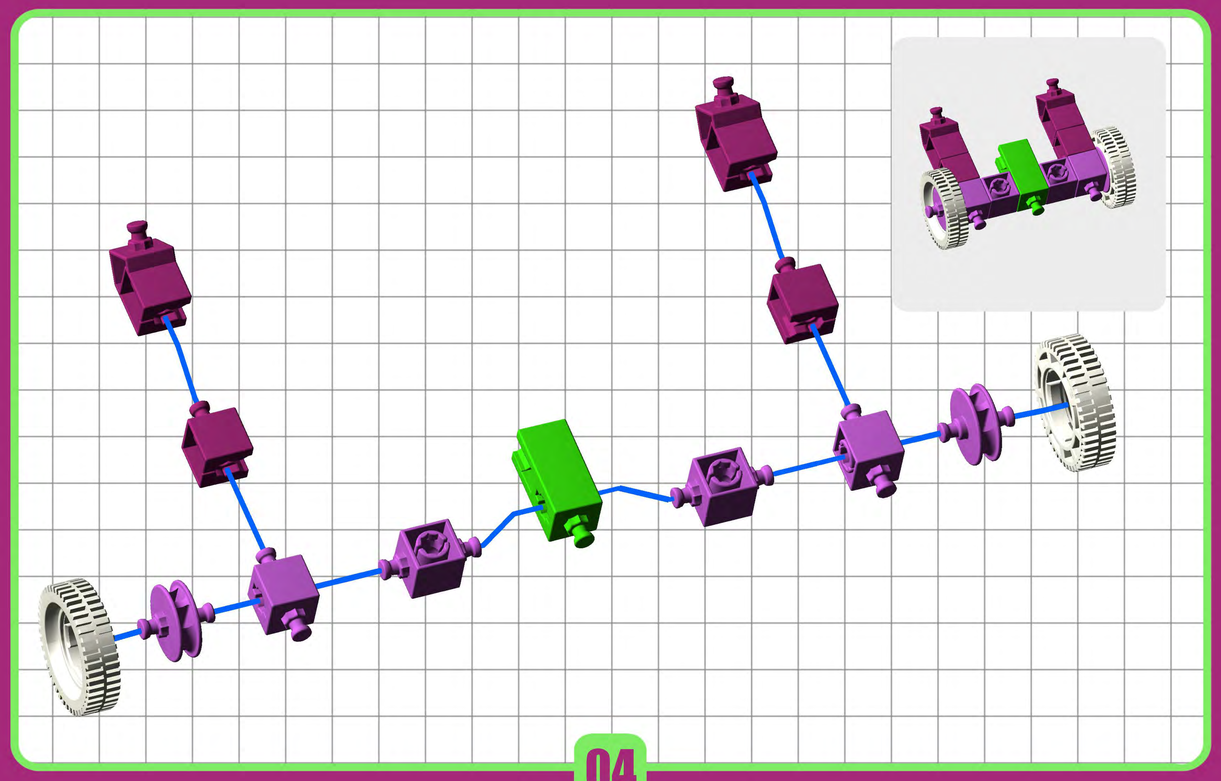

04

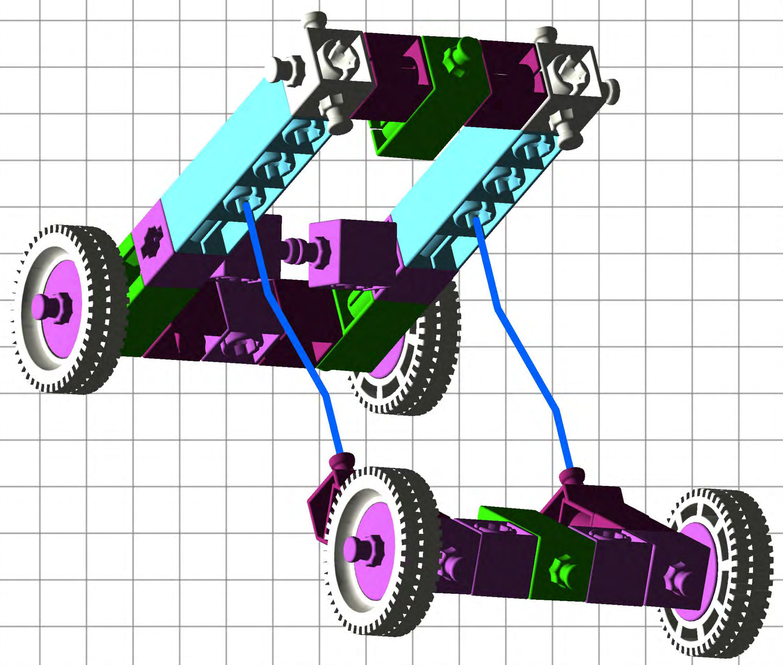

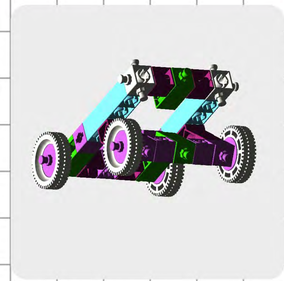

05

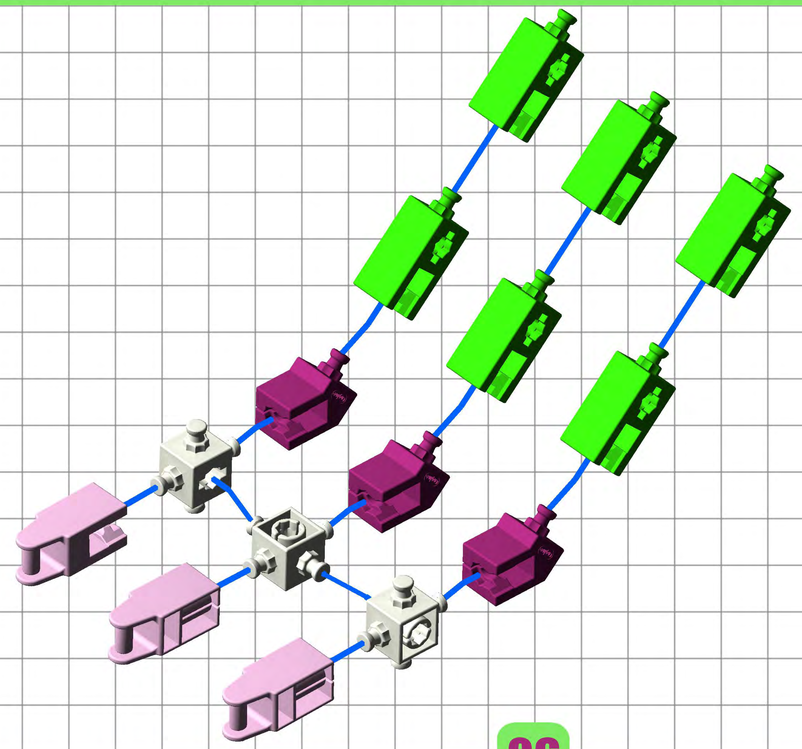

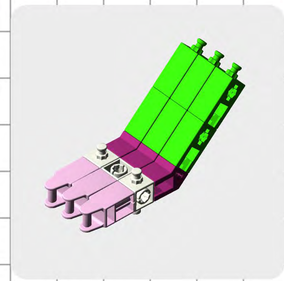

06

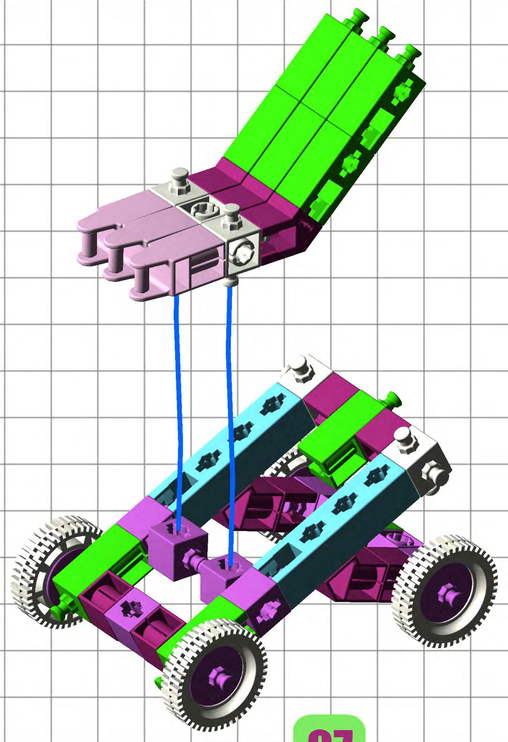

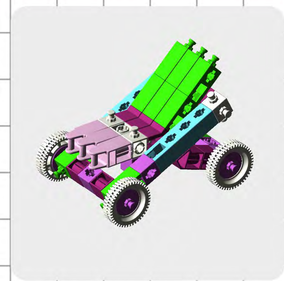

07

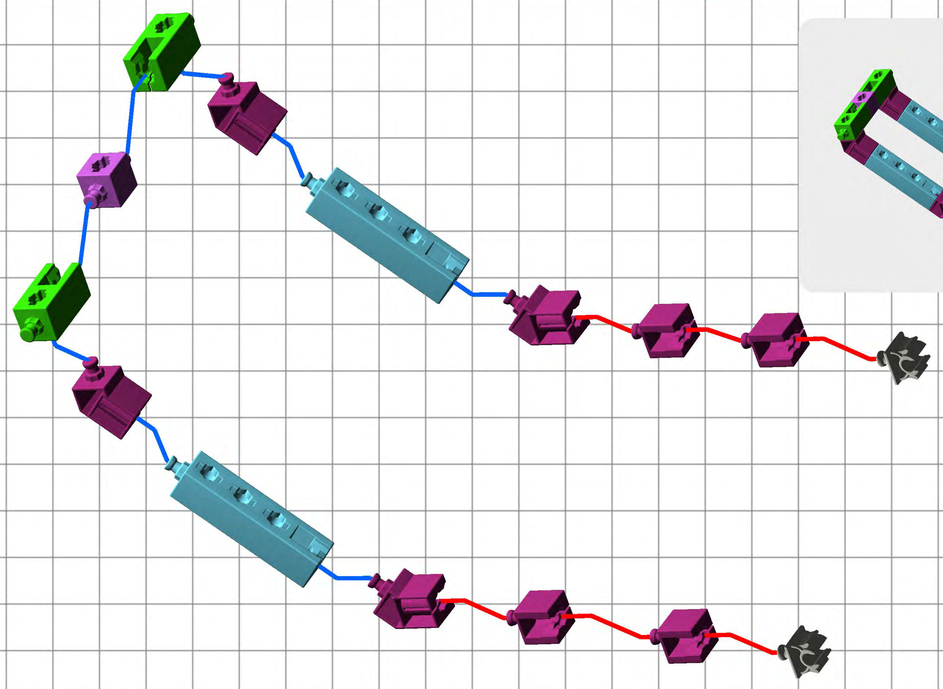

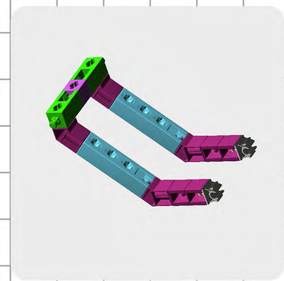

08